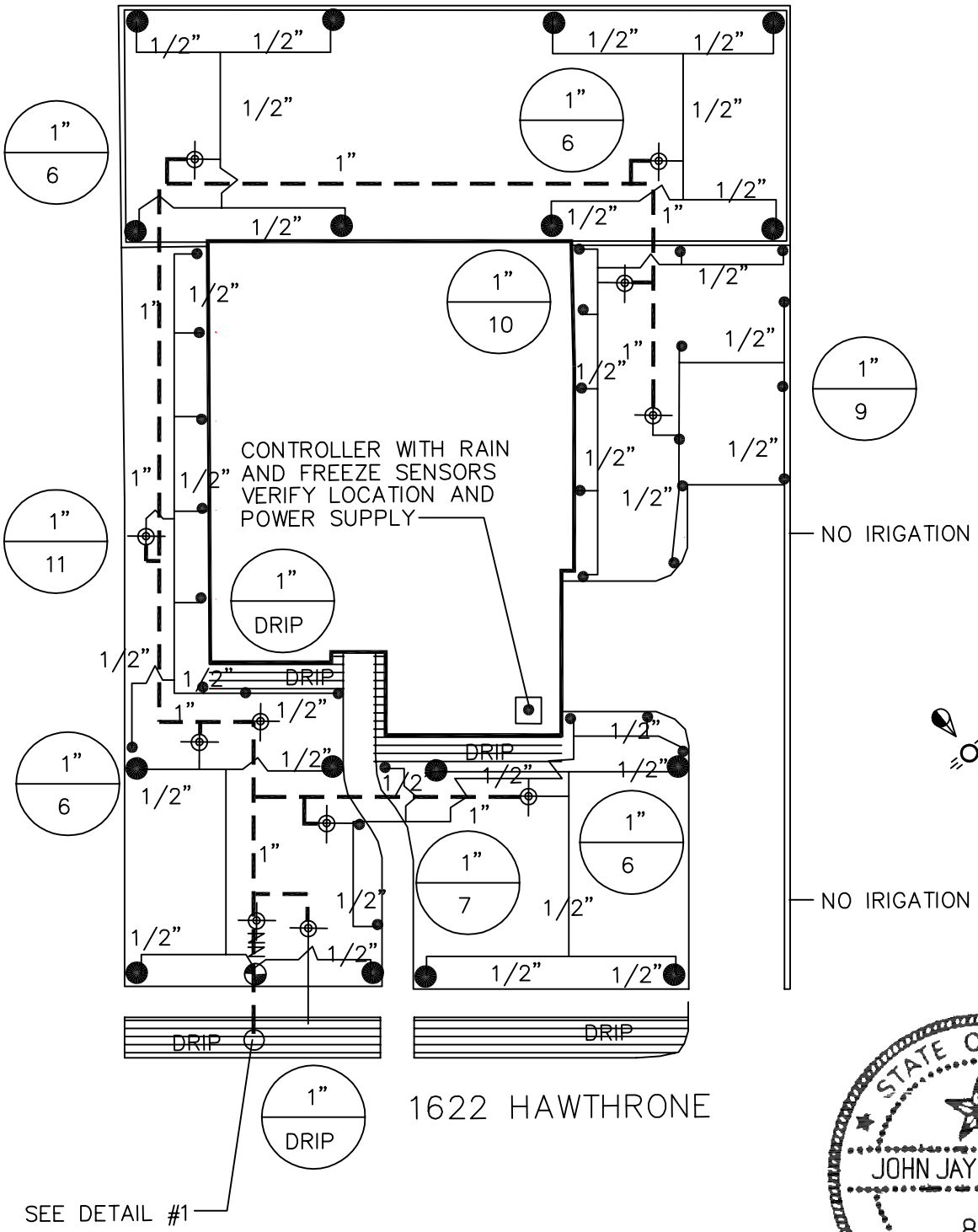

1622 HAWTHRONE

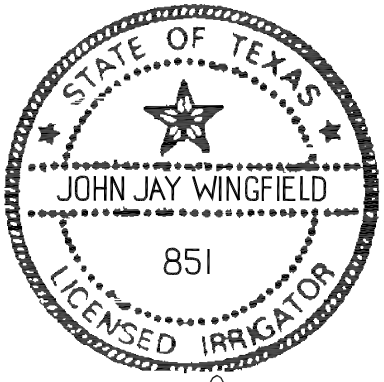

JUST PLANS
john@justplansllc.com
972-238-1498

SCALE: 1"=20'
1622 HAWTHRONE
CLEBURNE, TX

02/03/09
972-238-1498

IRRIGATION LEGEND

HUNTER SRS4 4" POP-UP LAWN HEAD

HUNTER PGP ROTOR PC,FC

HUNTER SRV 1" ELECTRIC VALVE

HUNTER SRC CONTROLLER W/ RAIN AND FREEZE

WATER METER, SIZE AS INDICATED
WITH D.C.A., SIZE AS INDICATED

PVC CLASS 200 MAINLINE

PVC CLASS 200 LATERAL LINE

X — VALVE SIZE
XX — GPM

DRIP TUBING
(18" LATERAL SPACING, 12" EMIITER SPACING)
PVC LATERAL PIPING SIZED AS REQUIRED
INSTALL ALL EQUIPMENT ACCORDING TO
MANUFACTURERS SPECIFICATIONS
NETAFIM TECHLINE CV

1" DRIP
NETAFIM DRIP KIT WITH
PRESSURE REGULATOR AND FILTER
INSTALL ALL EQUIPMENT ACCORDING TO
MANUFACTURERS SPECIFICATIONS

ALL IRRIGATION EQUIPMENT TO BE
LOCATED NO CLOSER THAN 4" TO
ANY PAVEMENT AND/OR STRUCTURE

DESIGN PRESSURE – 50 PSI
STATIC PRESSURE – 54 PSI

ELECTRICAL SPLICES AT EACH VALVE
AND CONTROLLER ONLY.

IRRIGATION IN TEXAS IS REGULATED
BY THE TEXAS COMMISSION ON
ENVIRONMENTAL QUALITY (TCEQ)
MC–178/ P.O.BOX 13087, AUSTIN, TX
78711–3087. TECQ'S WEBSITE IS:
www.tceq.state.tx.us

DETAIL 1

1" MASTER VALVE
1" BACKFLOW PER CITY CODE
1" Y STRAINER
1" BALL VALVE
COPPER PIPE BETWEEN
METER AND BALL VALVE
5/8" WATER METER (EXISTING)
VERIFY SIZE AND LOCATION

JUST PLANS
john@justplansllc.com
972–238–1498

SCALE: 1"=20'
1622 HAWTHRONE
CLEBURNE, TX

STATE OF TEXAS
JOHN JAY WINGFIELD
851
LICENSED IRRIGATOR

02/03/09
972–238–1498