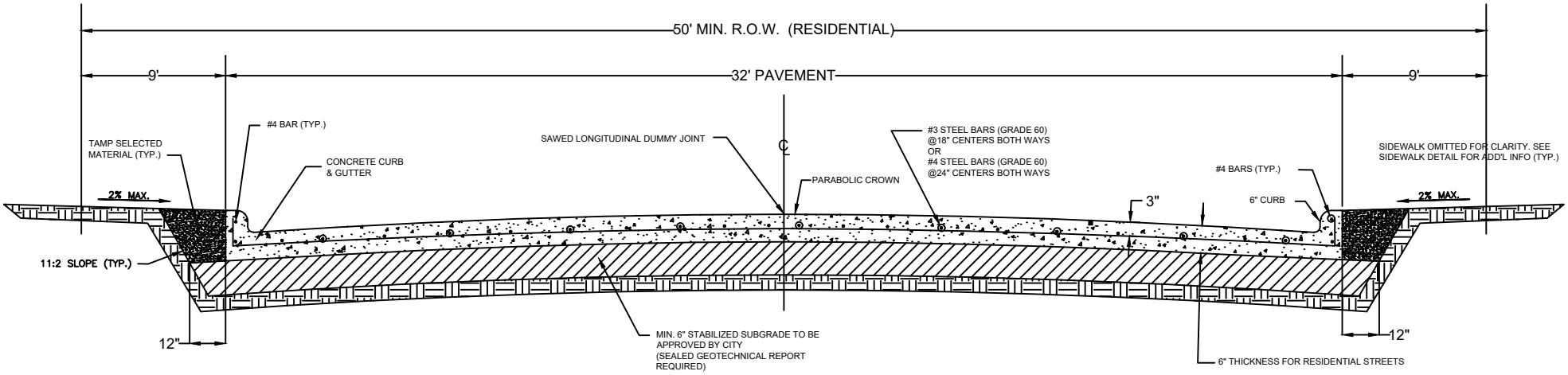

NOTES:

1. GEOTECHNICAL REPORT PREPARED BY LICENSED ENGINEER IS REQUIRED TO DETERMINE LIME OR CEMENT APPLICATION RATE.
2. SUBGRADE COMPACTION SHALL BE 95% STANDARD PROCTOR DENSITY.
3. LIME SHALL BE APPLIED AT 6% BY WEIGHT. MINIMUM QUANTITY IS 36LBS/SY. IN SOME AREAS A GREATER QUANTITY (OR A LIME SERIES TEST) MAY BE REQUIRED AT THE CITY'S DISCRETION
4. CONCRETE SHALL BE APPLIED AT 4% BY WEIGHT, MINIMUM QUANTITY IS 28LBS/SY.

cleburne
this is texas

* NEW RESIDENTIAL STREETS
WITHIN CLEBURNE CITY LIMITS

DETAIL NAME / PROJECT NO.

TYPICAL STREET SECTION – NEW RESIDENTIAL

ENGINEERING SERVICES DEPARTMENT

FILE:

SCALE: NOT TO SCALE

DATE: 2020 VERSION

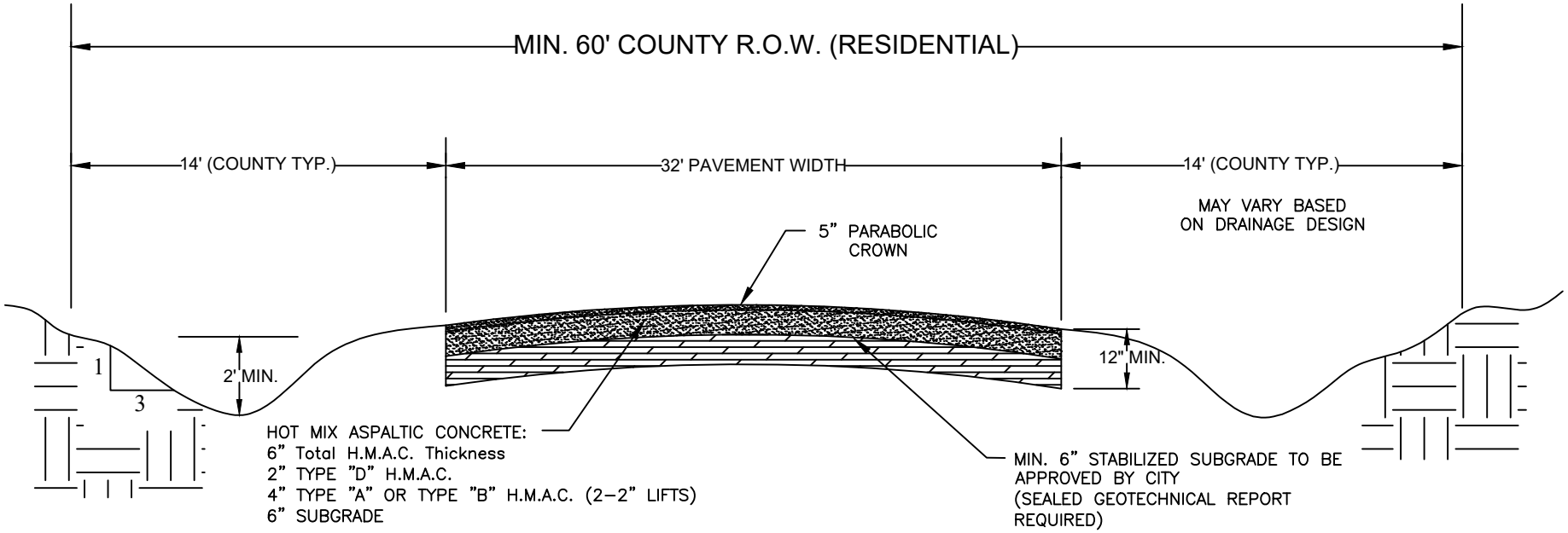

NOTES:

1. BAR DITCH SIDE SLOPE VARIES DEPENDING UPON DESIGN. NO GREATER THAN 3:1 WITHOUT ARMORING.
2. GEOTECHNICAL REPORT PREPARED BY LICENSED ENGINEER IS REQUIRED TO DETERMINE LIME OR CEMENT APPLICATION RATE.
3. SUBGRADE COMPACTION SHALL BE 95% STANDARD PROCTOR DENSITY.

cleburne
this is texas

* NOT ALLOWED WITHIN CITY LIMITS WITHOUT PRIOR AUTHORIZATION OF PUBLIC WORKS DIRECTOR

DETAIL NAME / PROJECT NO.

NEW RURAL RESIDENTIAL STREET – ASPHALT

ENGINEERING SERVICES DEPARTMENT

FILE:

SCALE: NOT TO SCALE

DATE: 2020 VERSION

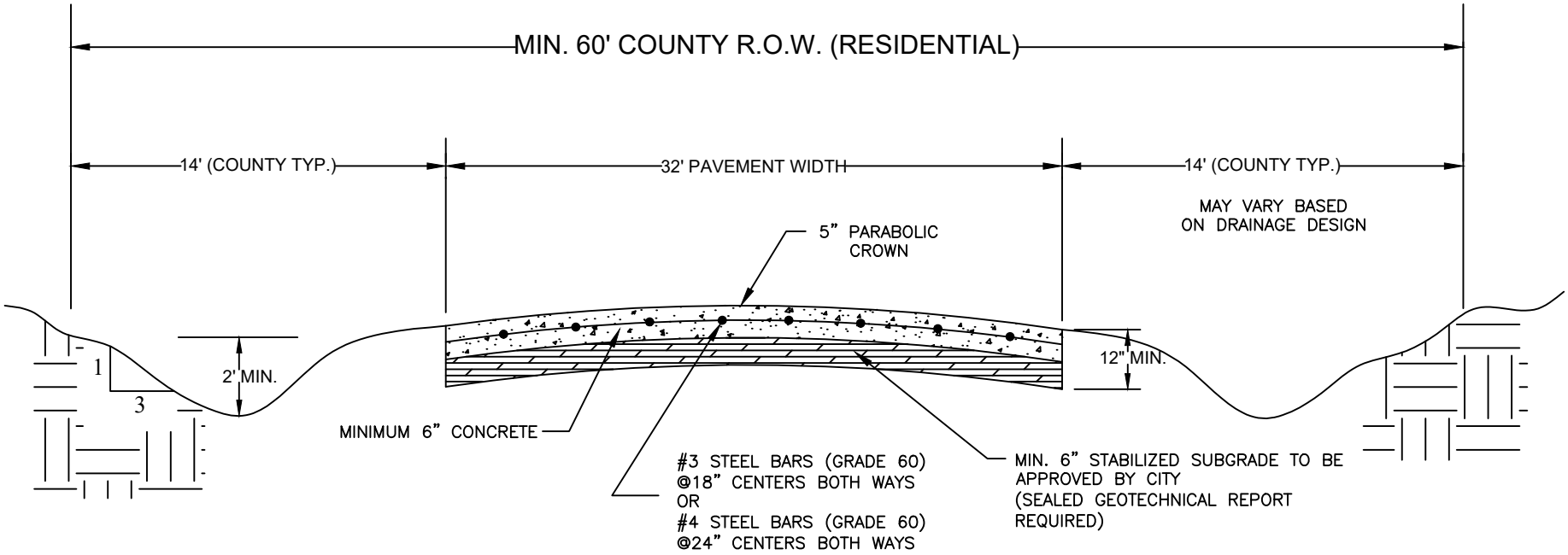

NOTES:

1. BAR DITCH SIDE SLOPE VARIES DEPENDING UPON DESIGN. NO GREATER THAN 3:1 WITHOUT ARMORING.
2. GEOTECHNICAL REPORT PREPARED BY LICENSED ENGINEER IS REQUIRED TO DETERMINE LIME OR CEMENT APPLICATION RATE.
3. SUBGRADE COMPACTION SHALL BE 95% STANDARD PROCTOR DENSITY.

cleburne
this is texas

* NOT ALLOWED WITHIN CITY LIMITS WITHOUT PRIOR AUTHORIZATION OF PUBLIC WORKS DIRECTOR

DETAIL NAME / PROJECT NO.

NEW RURAL RESIDENTIAL STREET – CONCRETE

ENGINEERING SERVICES DEPARTMENT

FILE:

SCALE: NOT TO SCALE

DATE: 2020 VERSION

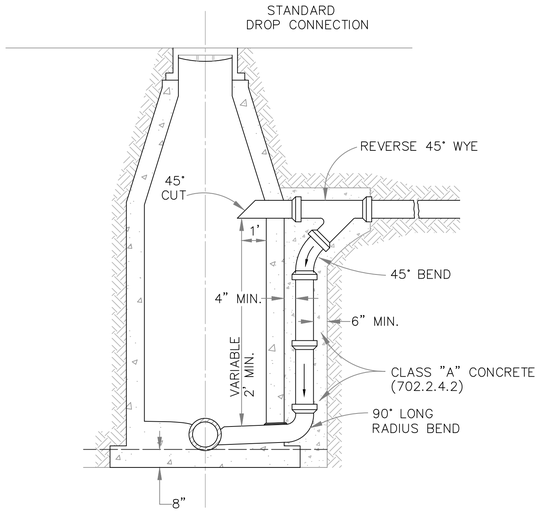

DROP CONNECTIONS FOR SANITARY SEWER MANHOLE

N.T.S.

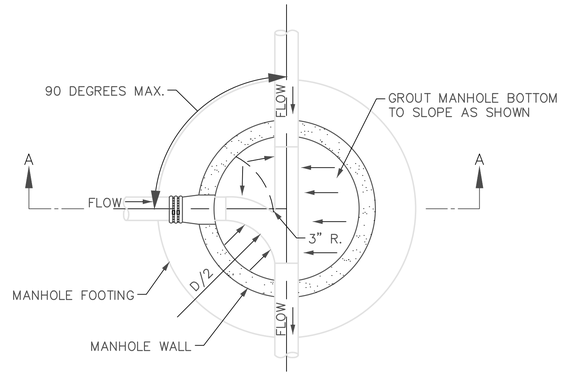

PLAN

N.T.S.

D = MANHOLE DIAMETER

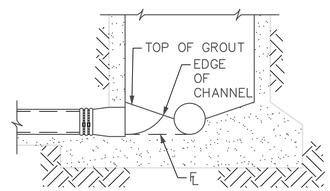

SECTION "A – A"

N.T.S.

GENERAL NOTES:

1. ALL CONSTRUCTION MATERIALS, METHODS AND PLACEMENT NOT DETAILED BELOW SHALL MEET OR EXCEED THE STANDARD SPECIFICATIONS OF THE NORTH CENTRAL TEXAS COUNCIL OF GOVERNMENTS, OCTOBER 2004 EDITION UNLESS SUPERSEDED BY CITY OF CLEBURNE STANDARD SPECIFICATIONS OR MATERIAL TESTING POLICIES.
2. RING AND COVER SHALL BE DOMESTIC CASTING ONLY. (BASS & HAYS VRM 30). CAST IN PLACE MANHOLE OR WEIGHTED DESIGNED CONE WITH BOLT DOWN RING AND COVER TO BE USED IN FLOOD–PRONE AREA AND MUST BE ANCHORED INTO CONE.
3. MANHOLE MARKERS SHALL BE INSTALLED IN ALL UNDEVELOPED AREAS.
4. MANHOLES SHALL BE PLACED MONOLITHICALLY WITH STREET. IF A BLOCK OUT IS NEEDED INSPECTOR WILL PRE–APPROVE SIZE & SHAPE OF BLOCK OUT.
5. INVERTS FOR CAST–IN–PLACE MANHOLES SHALL BE MADE BY PLACING PIPE CONTINUOUSLY THROUGH MANHOLES AND CUTTING OUT THE TOP OF THE PIPE. A MINIMAL AMOUNT OF CONCRETE INVERT BETWEEN PIPE ENDS WILL BE PERMITTED.
6. CONCRETE FOR MANHOLES TO BE CLASS "F" (6.5 SACK, 4200 PSI) PER NCTCOG SPECIFICATIONS 702.2.4.2. ALL CONCRETE SHALL CONTAIN SUFFICIENT AIR ENTRAINING AGENT TO YIELD 5% AIR CONTENT.
4. NO HINGED MANHOLE LIDS WITHOUT REASON AND APPROVED BY DIRECTOR OF PUBLIC WORKS.
5. WATER AND SEWER MAINS SHALL BE PLACED ON OPPOSITE SIDES OF THE STREET
6. ALL MANHOLES SHALL BE INSTALLED WITH 5'X5' CONCRETE PAD WITH MANHOLE COVERS IN CENTER OF PAD. THE CONCRETE PAD SHALL MATCH PAVEMENT THICKNESS WITHIN PAVEMENT, OR BE 6" THICK OUTSIDE PAVED AREAS. PADS SHALL BE REINFORCED WITH FOUR NO. 4 REBARS. AROUND CONCRETE PADS.
7. MANHOLES SHALL BE INSTALLED IN CENTER OF LANES AND OUTSIDE NORMAL TIRE PATH OF LANE WHEN IN PAVED ROADWAYS.
8. VALVE AND MANHOLE MARKERS SHALL BE ETCHED INTO CURB AND PAINTED WITH DIRECTION ARROWS.
9. SERVICE LINES SHALL NOT CROSS LOT LINES.
10. SEWER AND WATER MAINS SHALL BE MINIMUM 9' APART.

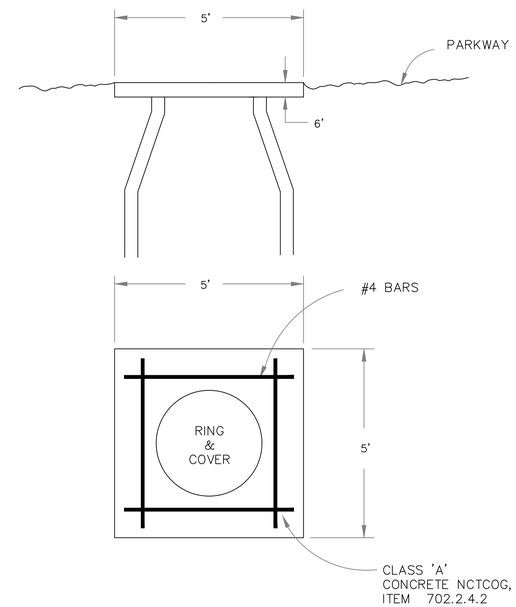

MANHOLE PAD DETAIL

N.T.S.

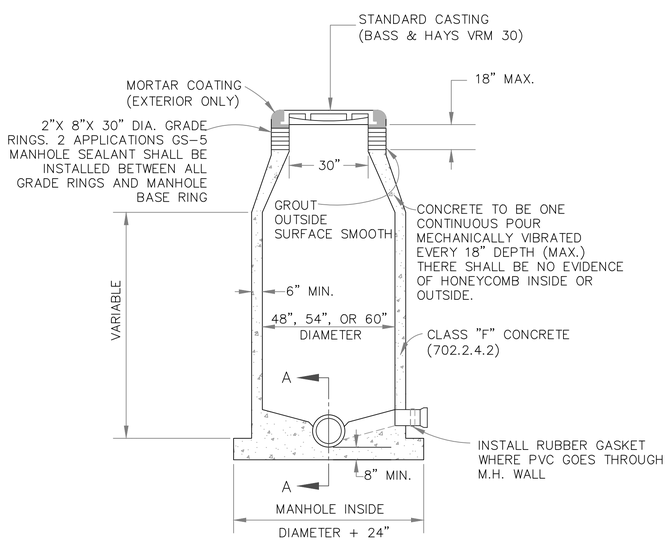

CAST IN PLACE MANHOLE

N.T.S.

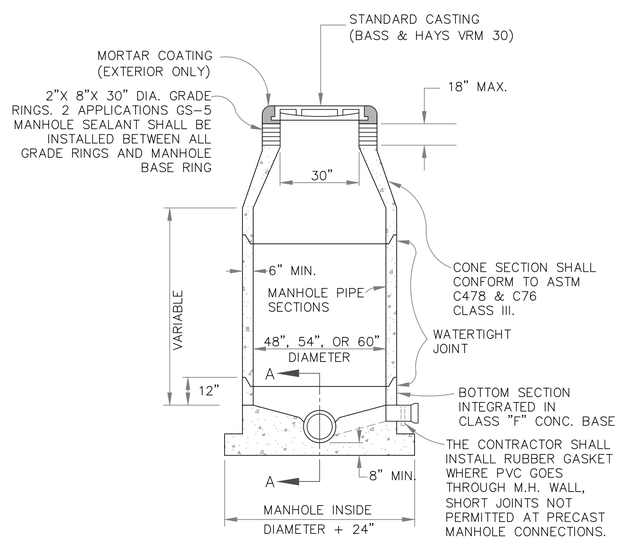

PRECAST CONCRETE MANHOLE

N.T.S.

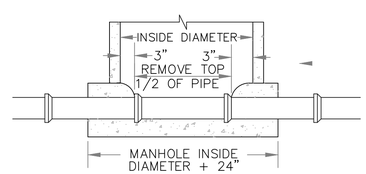

SECTION "A – A"

N.T.S.

cleburne
this is texas

DETAIL NAME / PROJECT NO.

SEWER DETAILS

ENGINEERING SERVICES DEPARTMENT

FILE: SS–1

SCALE: NOT TO SCALE

DATE: 2020 VERSION

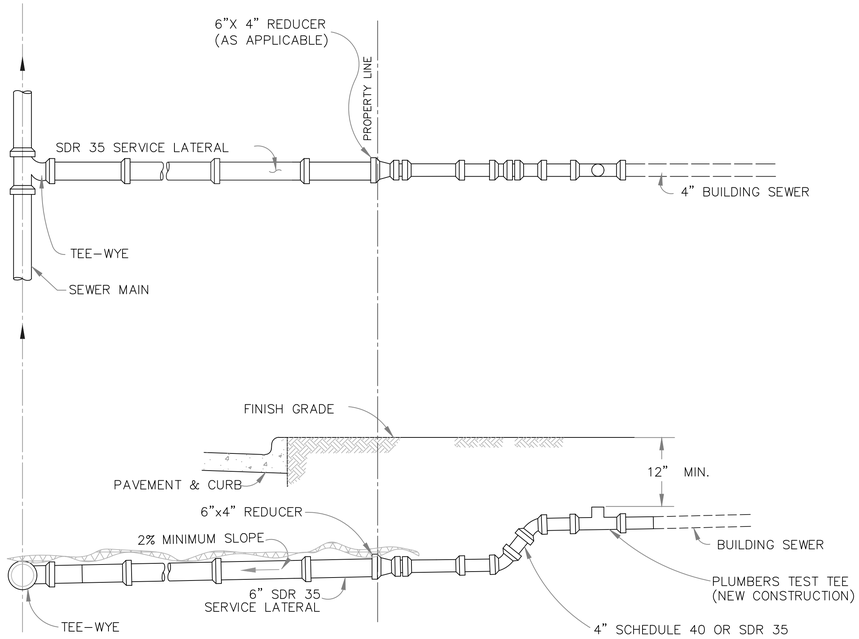

NOTES:

1. RUBBER BOOTS WILL ONLY BE PERMITTED FOR CLAY OR CONCRETE TILE SERVICE PIPE AND MUST BE CONCRETE ENCASED.
2. ONE 4" CONNECTION PER DWELLING UNIT (RESIDENTIAL ONLY)

STANDARD SEWER SERVICE CONNECTION

N.T.S. (PLUMBER CONNECTION OR CIP RECONSTRUCTION)

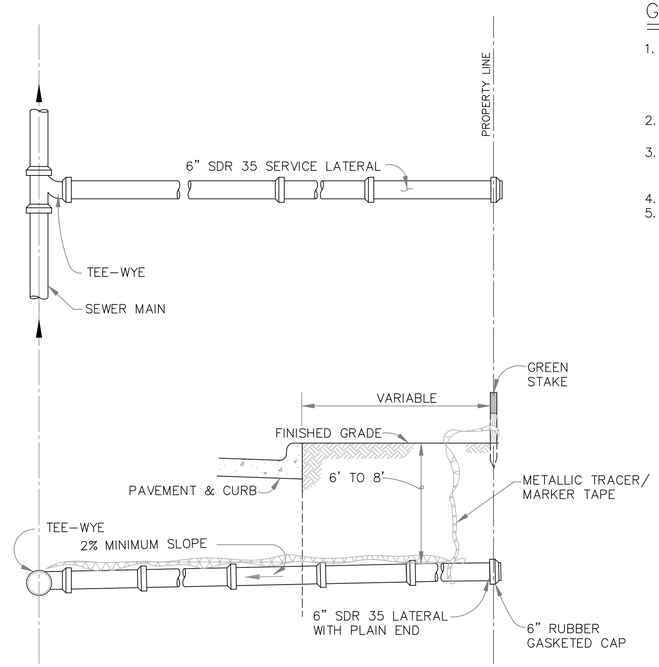

STANDARD SEWER SERVICE FOR NEW CONSTRUCTION

N.T.S. (4" MIN. FOR RESIDENTIAL ONLY)

GENERAL NOTES:

1. ALL CONSTRUCTION MATERIALS, METHODS AND PLACEMENT NOT DETAILED BELOW SHALL MEET OR EXCEED THE STANDARD SPECIFICATIONS OF THE NORTH CENTRAL TEXAS COUNCIL OF GOVERNMENTS, OCTOBER 2004 EDITION UNLESS SUPERSEDED BY CITY OF CLEBURNE STANDARD SPECIFICATIONS OR MATERIAL TESTING POLICIES.
2. WHERE COVER IS LESS THAN 3.5 FEET, SANITARY SEWER MAINS AND LATERALS SHALL BE CONCRETE ENCASED OR CAPPED (SEE SHEET M–1).
3. METALLIC TRACER/MARKER TAPE, GREEN IN COLOR AND MARKED "SANITARY SEWER", TO BE PLACED ALONG MAIN LINES & SERVICES ON TOP OF CRUSHED STONE EMBEDMENT.
4. DOUBLE SWEEP CLEANOUT TEE 2' BEHIND CURB
5. NO APPURTENANT STRUCTURES ALLOWED IN SIDEWALK OR DRIVEWAYS

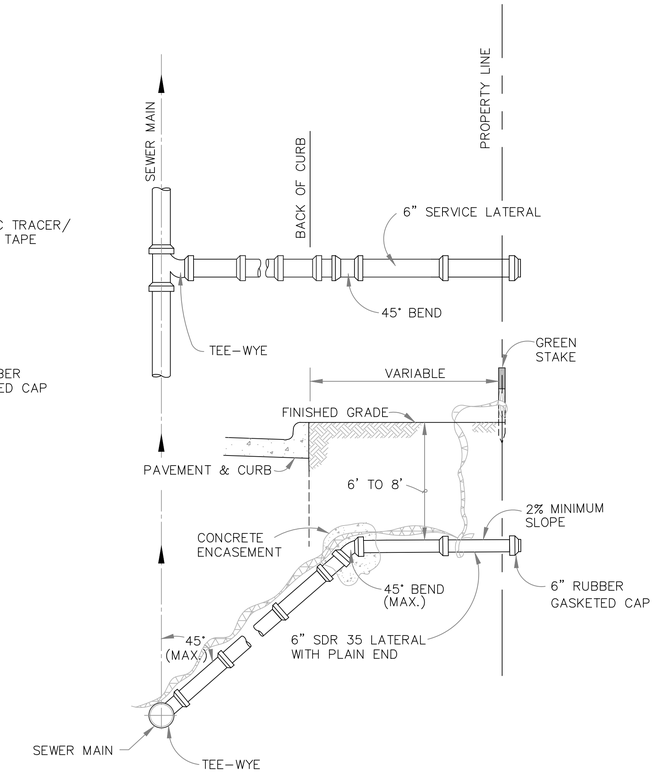

STANDARD DEEP SERVICE DETAIL FOR NEW CONSTRUCTION

N.T.S.

NOTES:

1. ROTATE TEE–WYE TO 45° MAX.
2. ONLY ONE 45° BEND WILL BE USED, 45° BEND MUST BE PLACED OUTSIDE OF PAVEMENT WHERE POSSIBLE.
3. CONCRETE ENCASE 45° BEND.

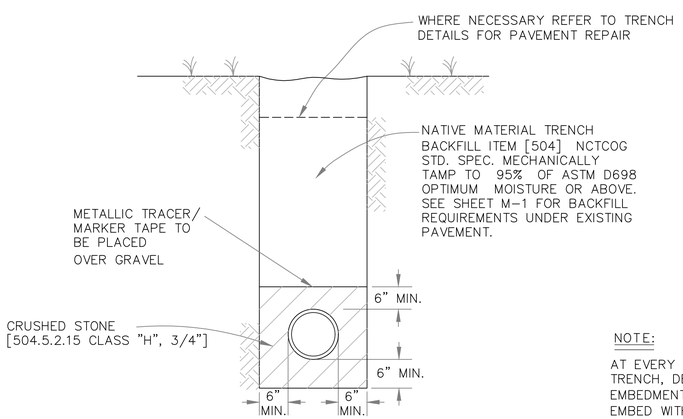

NOTE:

AT EVERY 100' INTERVAL ALONG TRENCH, DELETE BEDDING AND EMBEDMENT FOR 6' ALONG TRENCH. EMBED WITH CLASS "B" CONCRETE OR FLOWABLE FILL TO DISCOURAGE WATER MOVEMENT DOWN TRENCH.

SANITARY SEWER TYPICAL EMBEDMENT

N.T.S.

cleburne
this is texas

DETAIL NAME / PROJECT NO.

SEWER DETAILS

ENGINEERING SERVICES DEPARTMENT

FILE: SS–2

SCALE: NOT TO SCALE

DATE: 2020 VERSION

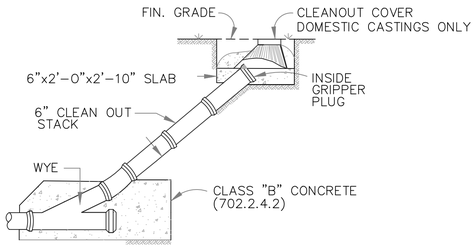

CLEAN – OUT

N.T.S.

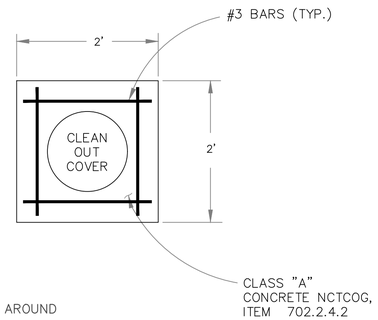

NOTES:

1. IF CLEANOUT IS PLACED IN ADVANCE OF PAVEMENT PLACE SAND AROUND CLEANOUT CASTING IN LIEU OF CLASS B CONCRETE.
2. IF CLEANOUT IS OUTSIDE OF PAVEMENT, CENTER CASTING IN 24" X 24" CLASS A CONCRETE PAD 6" THICK WITH FOUR #3 BARS.

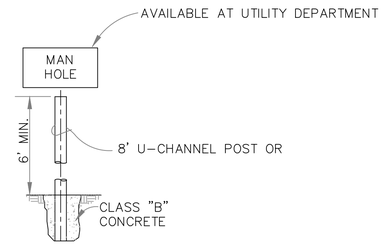

MANHOLE MARKER

N.T.S.

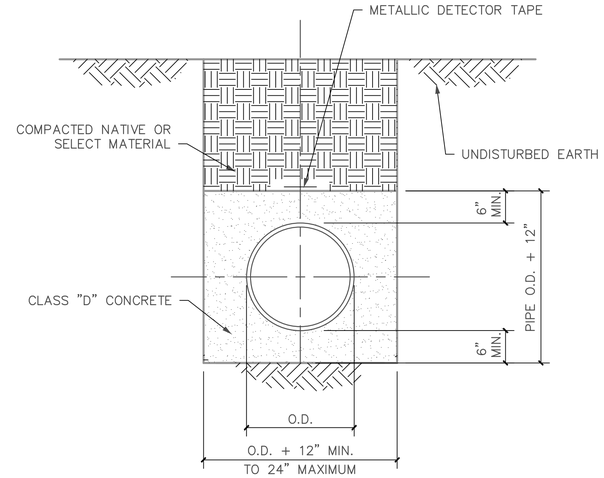

NOTE:
CONCRETE ENCASEMENT MAY BE MODIFIED FOR A CONCRETE CAP.

CONCRETE ENCASEMENT

N.T.S.

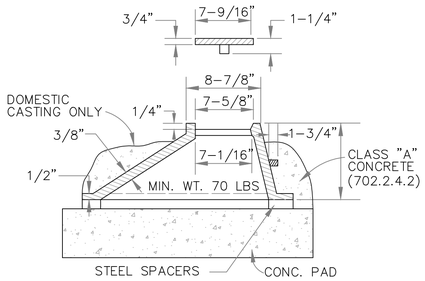

CLEANOUT COVER

N.T.S.

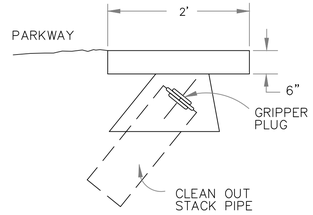

CLEANOUT COVER PAD DETAIL

N.T.S.

NOTE:

THIS DETAIL FOR CLEAN OUTS NOT IN PAVEMENT.

cleburne
this is texas

DETAIL NAME / PROJECT NO.

SEWER DETAILS

ENGINEERING SERVICES DEPARTMENT	FILE: SS-3	SCALE: NOT TO SCALE DATE: 2020 VERSION

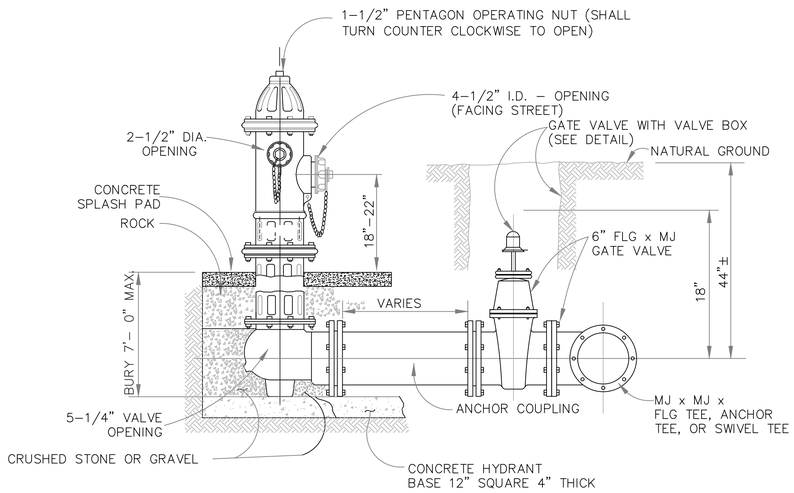

STANDARD FIRE HYDRANT DETAIL

N.T.S.

FIRE HYDRANT NOTES:

1. FIRE HYDRANT SHALL BE CLOW OR MUELLER.
2. CENTER OF F.H. BARREL SHALL BE NOT LESS THAN 2.5' OR MORE THAN 3.5' FROM BACK OF CURB OR EDGE OF PAVEMENT, UNLESS OTHERWISE APPROVED BY THE ENGINEERING DEPARTMENT.
3. ON PRIVATE CONTRACTS, THE DEVELOPER'S ENGINEER WILL STAKE F.H. HORIZONTAL LOCATION AND FLANGE ELEVATION.
4. FIRE HYDRANTS SHALL BE INSTALLED PRIMED ONLY, PAINTED AFTER INSTALLATION.
5. FIRE HYDRANTS TO BE PAINTED BY BUILDER – SHERWIN WILLIAMS POLANE SILVER, PART #: F635L5 OR EQUIVALENT.
6. HYDRANT LEADS OR FIRE LINES IN EXCESS OF 200' REQUIRE DOUBLE–CHECK ASSEMBLY AT MAIN.
7. ALL HYDRANT EXTENSIONS SHALL HAVE BREAKAWAY FLANGE AND STEM COUPLING.
8. BLOCKING OF FIRE HYDRANT SHALL BE REQUIRED FOR EXTENSIONS ACROSS STREETS FROM MAINS OF LEADS LONGER THAN ONE JOINT OF PIPE. LAST JOINT OF PIPE CONNECTING TO HYDRANT MUST BE A FULL JOINT.
9. LOWER BARREL ON FIRE HYDRANT SHALL NOT EXCEED 7'–0". IF NECESSARY, RETAINED BENDS MAY BE USED TO ACHIEVE GRADE NEEDED WITHOUT EXCEEDING 7'–0" LOWER BARREL HEIGHT. ALL PIPING TO BE DUCTILE IRON.
10. PIPE WITH RETAINER GLANDS WILL ONLY BE PERMITTED FOR LEADS THAT EXCEED 36".
11. FIRE HYDRANTS SHALL NOT BE INSTALLED IN EXISTING OR PROPOSED SIDEWALKS.
12. FIRE HYDRANT SHALL BE LOCATED OUTSIDE OF CURB RETURNS AND A MINIMUM OF 4' FROM DRIVEWAYS APPROACH RADIUS.
13. HYDRANT VALVE SHALL FOLLOW GATE VALVE DETAIL.
14. ALL PIPING SHALL BE DUCTILE IRON WITH ALL BURIED VALVE, PIPE, AND FITTINGS TO BE POLY–WRAPPED.
15. HYDRANTS LOCATED IN PARKWAY MUST HAVE SPLASH PADS EXTENDED TO CURB.

NOTES:

1. USE OF HYDRANT REQUIRES VALID WATER FIRE HYDRANT METER AGREEMENT. CONTACT WATER UTILITIES CUSTOMER SERVICE OFFICE FOR APPLICATION.
2. METER AND REDUCED BACKFLOW PRESSURE ZONE (RPZ) BACKFLOW ASSEMBLY SHALL BE FULLY SUPPORTED WHEN CONNECTED TO FIRE HYDRANT.
3. METER AND RPZ BACKFLOW ASSEMBLY SHALL BE APPROVED BY CITY OF CLEBURNE WATER UTILITIES. METER MUST BE OBTAINED FROM CITY OF CLEBURNE WATER UTILITIES. METER SHALL BE TESTED ANNUALLY BY CITY OF CLEBURNE WATER UTILITIES.
4. PRIOR TO ANY USE OF FIRE HYDRANT WATER, THE RPZ MUST BE TESTED BY A CITY–REGISTERED BACKFLOW PREVENTION ASSEMBLY TESTER (BPAT), AND A CURRENT AND PASSING TEST AND MAINTENANCE REPORT (TMR) FOR THE RPZ MUST BE SENT TO UTILITY BILLING AT (817) 645–0919. BACKFLOW ASSEMBLY SHALL BE TESTED ANNUALLY AND EACH TIME THE ASSEMBLY IS MOVED TO A DIFFERENT FIRE HYDRANT SITE. COPY OF TEST SHALL BE SENT TO CITY OF CLEBURNE WATER UTILITIES WATER RESOURCE SERVICES BEFORE USAGE WILL BE ALLOWED.
5. CONTRACTOR WILL BE HELD RESPONSIBLE FOR ANY DAMAGE TO FIRE HYDRANT DURING USE.
6. SANDBAGS OR APPROVED SUPPORT SHALL NOT OBSTRUCT WEEP HOLE.

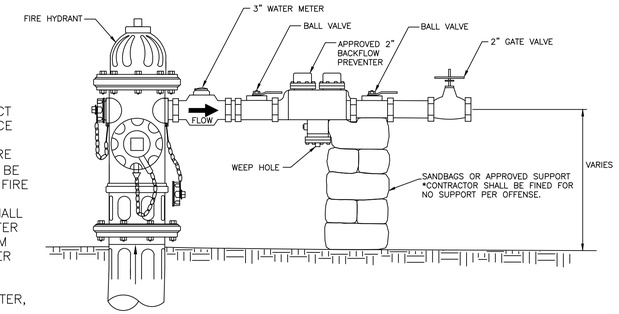

CONSTRUCTION WATER METER DETAIL

N.T.S.

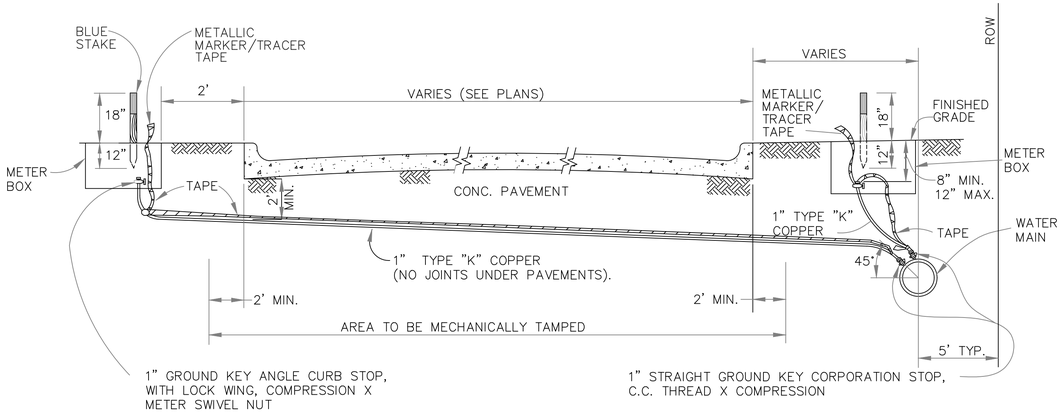

1" WATER SERVICE DETAIL

N.T.S. (TO BE USED FOR 3/4" & 1" METER, TO BE REDUCED AT METER)

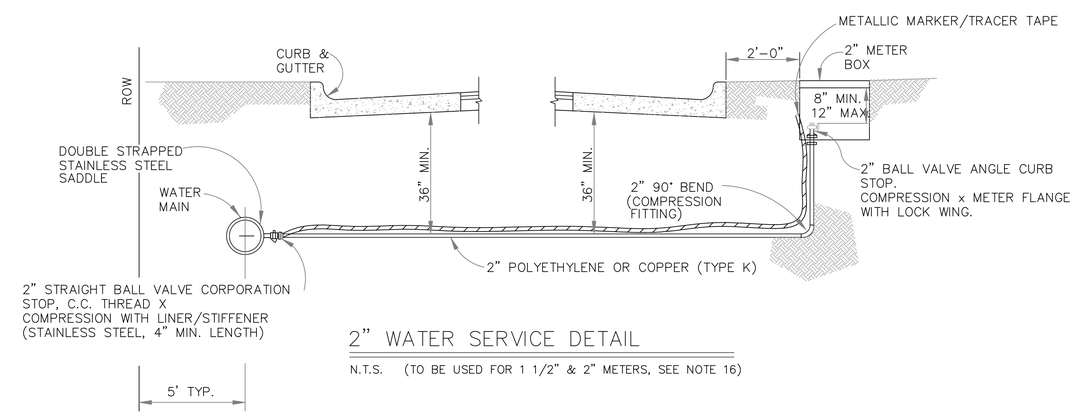

2" WATER SERVICE DETAIL

N.T.S. (TO BE USED FOR 1 1/2" & 2" METERS, SEE NOTE 16)

WATER SERVICE NOTES:

1. METALLIC MARKER/TRACER TAPE IS REQUIRED ALONG CITY SIDE SERVICE CONNECTION FROM MAIN TO METER
2. METALLIC MARKER/TRACER TAPE IS REQUIRED ALONG ENTIRE LENGTH OF MAIN

cleburne
this is texas

DETAIL NAME / PROJECT NO.

WATER DETAILS

ENGINEERING SERVICES DEPARTMENT

FILE: W–1

SCALE: NOT TO SCALE

DATE: 2020 VERSION

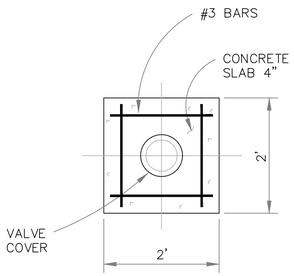

VIEW A–A

N.T.S.

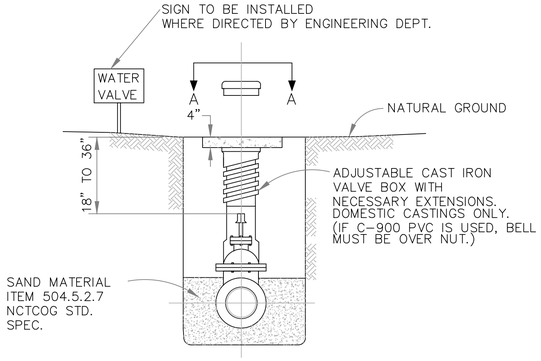

TYPICAL VALVE SETTING AND BOX 4" TO 12" GATE VALVE

N.T.S.

NOTES: WATER VALVE

1. ALL VALVES TO BE RESILIENT SEAT GATE VALVES WITH NON–RISING STEMS, COUNTER– CLOCKWISE OPENING.
2. VALVE STEM EXTENSIONS WITH ROCK GUARDS AND LOCK CLIPS SHALL BE INSTALLED WHERE NECESSARY TO PLACE OPERATING NUT NOT MORE THAN 36" BELOW FINISHED GRADE.
3. VALVES SHALL BE CLOW VALVES (OR APPROVED EQUAL) WITH STAINLESS STEEL HARDWARE (NUTS AND BOLTS). FLANGED WHERE APPLICABLE. MATERIALS AND INSTALLATION SHALL BE IN ACCORDANCE WITH NCTCOG ITEM 502.6
4. ALL VALVES SHALL BE INSTALLED WITH 2'X2' CONCRETE PAD WITH VALVE COVERS IN CENTER OF PAD. THE CONCRETE PAD SHALL MATCH PAVEMENT THICKNESS WITHIN PAVEMENT, OR BE 4" THICK OUTSIDE PAVED AREAS. PADS SHALL BE REINFORCED WITH FOUR NO. 3 REBARS AROUND CONCRETE PADS.
5. VALVES SHALL BE INSTALLED IN CENTER OF LANES AND OUTSIDE NORMAL TIRE PATH OF LANE WHEN IN PAVED ROADWAYS.

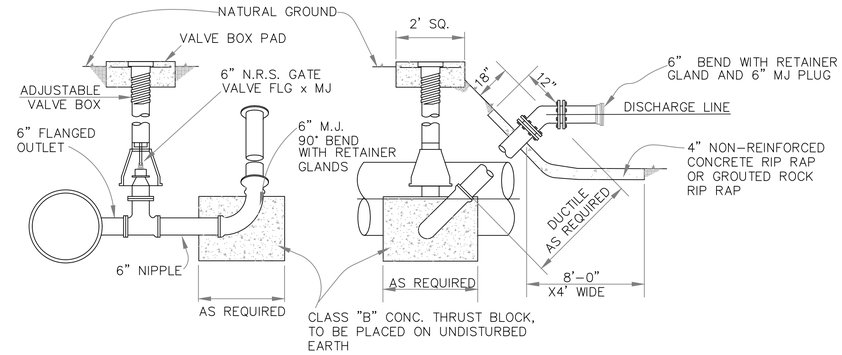

BLOW OFF VALVE DETAIL

N.T.S.

NOTES:

1. MUST BE DISCHARGED INTO STORM SEWER, BRIDGE OR CULVERT.
2. USE APPROPRIATE BEND TO MAKE DISCHARGE END HORIZONTAL.
3. ALL FITTINGS SHALL BE RETAINED & DISCHARGE END SHALL BE CLOSED W/MJ PLUG.

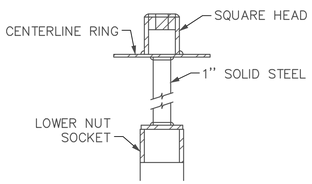

VALVE EXTENSION

N.T.S.

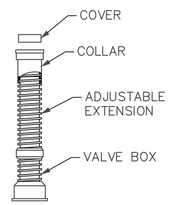

N.T.S.

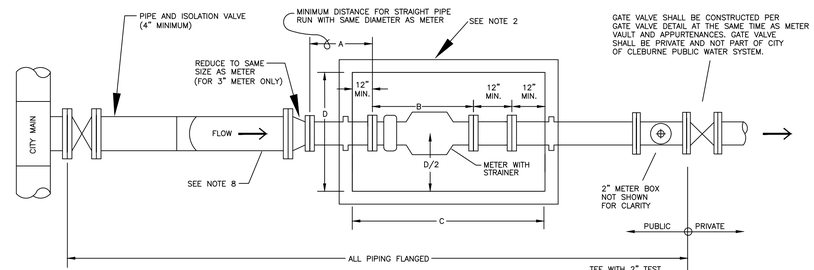

PLAN

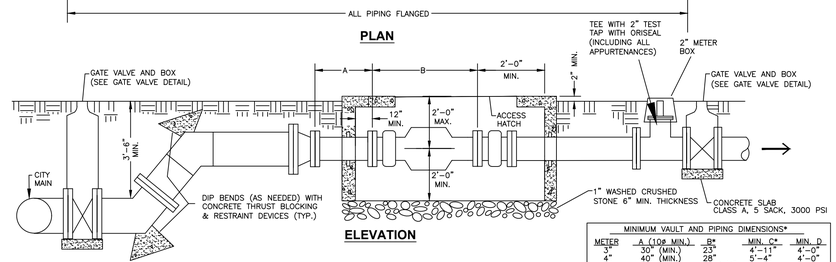

ELEVATION

NOTES

1. PIPING & BENDS IN METER VAULT SHALL BE FLANGED DUCTILE IRON, CLASS 350. OTHER PIPING & FITTINGS SHALL BE RESTRAINED MJ OR FLANGED DUCTILE IRON.
2. METER VAULT SHALL NOT BE INSTALLED IN EXISTING OR PROPOSED SIDEWALKS, DRIVEWAYS, PAVEMENTS OR ANY TRAFFIC AREAS.
3. ACCESS HATCH FOR METER VAULT SHALL BE 3'–6" X 3'–6" AS MANUFACTURED BY BILCO OR APPROVED EQUAL. HATCH SHALL BE LOCATED FOR EASE OF ENTRY AND ACCESS TO METER.
4. TOP OF VAULT SHALL BE 2" ABOVE GROUND WITH DRAINAGE SLOPING DOWN AWAY FROM VAULT.
5. METER BYPASSES ARE ONLY ALLOWED ON ONE–WAY FEEDS.
6. A 4" SERVICE IS REQUIRED FOR 3" AND 4" METERS. SERVICES FOR METERS GREATER THAN 4" SHALL MATCH THE METER SIZE.

MINIMUM VAULT AND PIPING DIMENSIONS*

METER	A (10# MIN.)	B*	MIN. C*	MIN. D
3"	30" (MIN.)	23"	4'–11"	4'–0"
4"	40" (MIN.)	28"	5'–4"	4'–0"
6"	60" (MIN.)	45 1/4"	6'–9"	4'–0"
8"	80" (MIN.)	52"	7'–4"	4'–6"
10"	100" (MIN.)	67 1/4"	8'–7"	4'–6"

*SEE NOTE 2. METER LENGTH (B) MAY CHANGE ANNUALLY AND WILL AFFECT MIN. VAULT LENGTHS (C). DIMENSIONS SHOWN ARE FOR DOMESTIC METERS ONLY. IRRIGATION METERS HAVE SHORTER DIMENSIONS.

METER VAULT DETAIL

N.T.S.

cleburne
this is texas

DETAIL NAME / PROJECT NO.

WATER DETAILS

ENGINEERING SERVICES DEPARTMENT

FILE: W–2

SCALE: NOT TO SCALE

DATE: 2020 VERSION

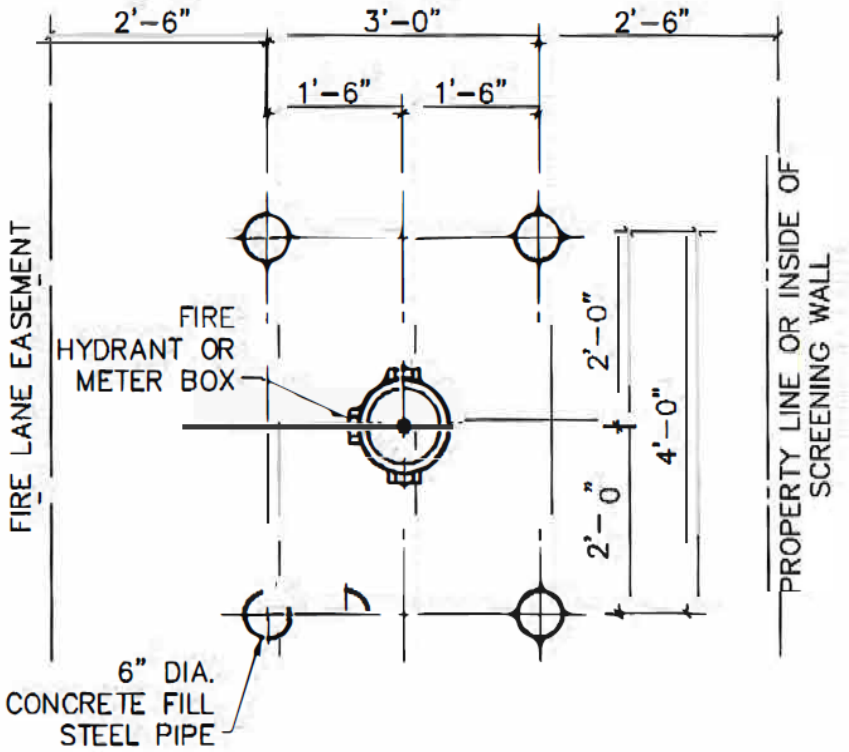

NOTES:

1. FOR USE WHERE CURBS ARE NOT POSSIBLE OR AS SPECIFIED BY THE CITY.
2. FIRE HYDRANTS SHALL BE 35' CLEAR OF ALL BUILDINGS.
3. GUARD POSTS SHALL BE 6 LINEAR FEET OF 6" DIAMETER STEEL PIPE (3' ABOVE & BELOW GROUND LEVEL). POST SHALL BE ENCASED IN 16" DIAMETER CONCRETE PIER TO A DEPTH OF 12" BELOW POST BOTTOM. REINFORCED CONCRETE PIER WITH 2 – #6 BARS (12" LONG) THROUGH POST INTO PIER. POST ABOVE GROUND LEVEL SHALL BE PAINTED SAFETY YELLOW.

REVISION DATE 03.2020	STANDARD CONSTRUCTION DETAIL **PIPE BOLLARD**	cleburne this is texas

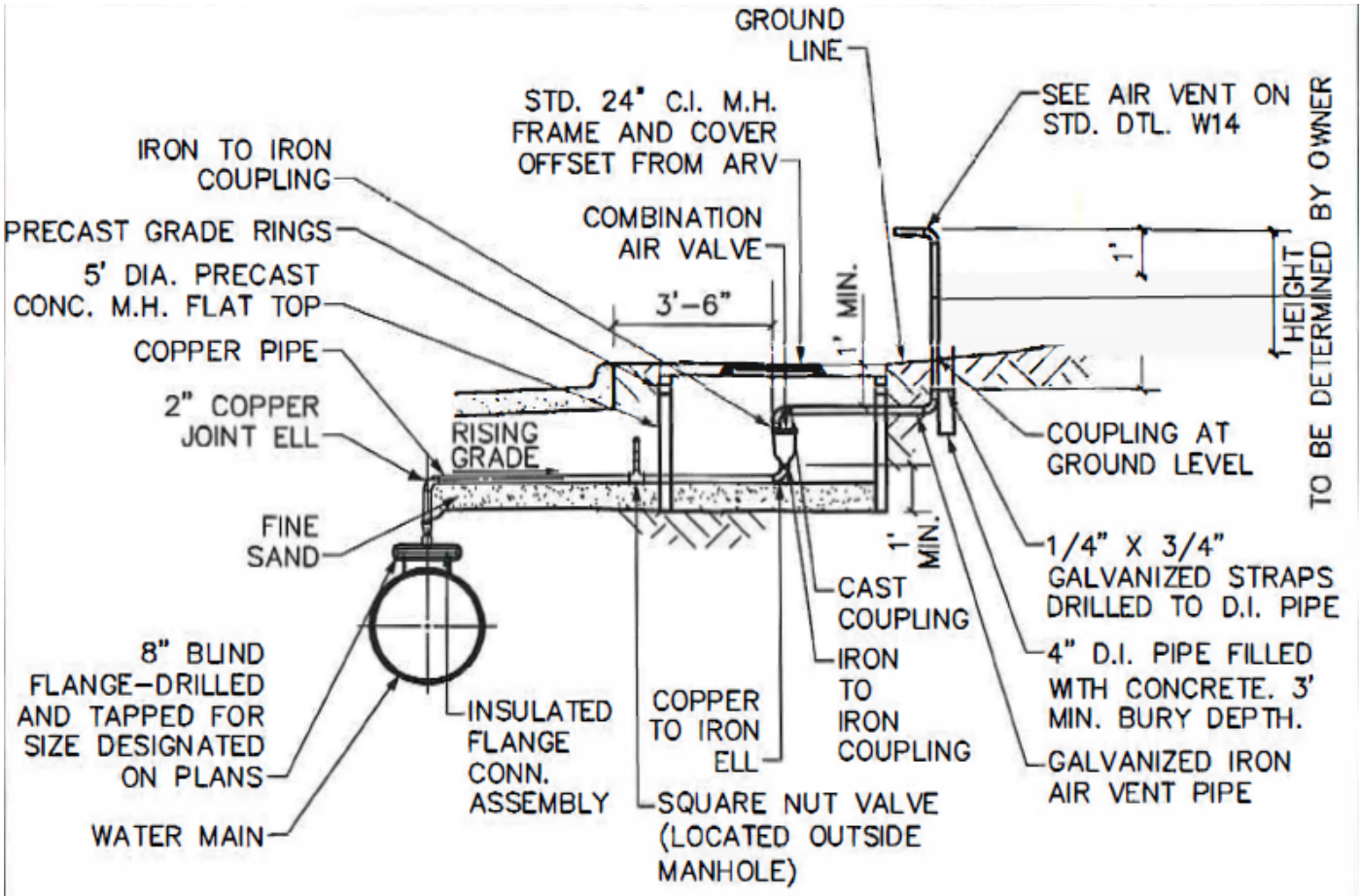

COMBINATION AIR VACUUM VALVE - TYPE "1"

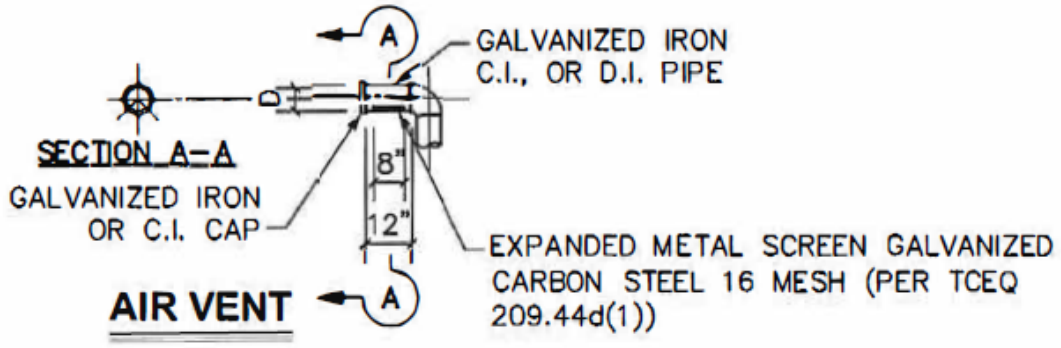

AIR VENT

NOTES:

1. WHEN NOT IN PAVING OR WALK, A CONCRETE PAD, REINFORCED W/ #3 BARS AT 12" C-C EACH WAY, SHALL EXTEND A MINIMUM OF 2' AROUND THE M.H. AND VENT PIPE, AND SHALL BE A MINIMUM OF 4" THICK.

REVISION DATE 03.2020	STANDARD CONSTRUCTION DETAIL **COMBINATION AIR VACUUM VALVE TYPE "1" AND AIR VENT**	cleburne this is texas

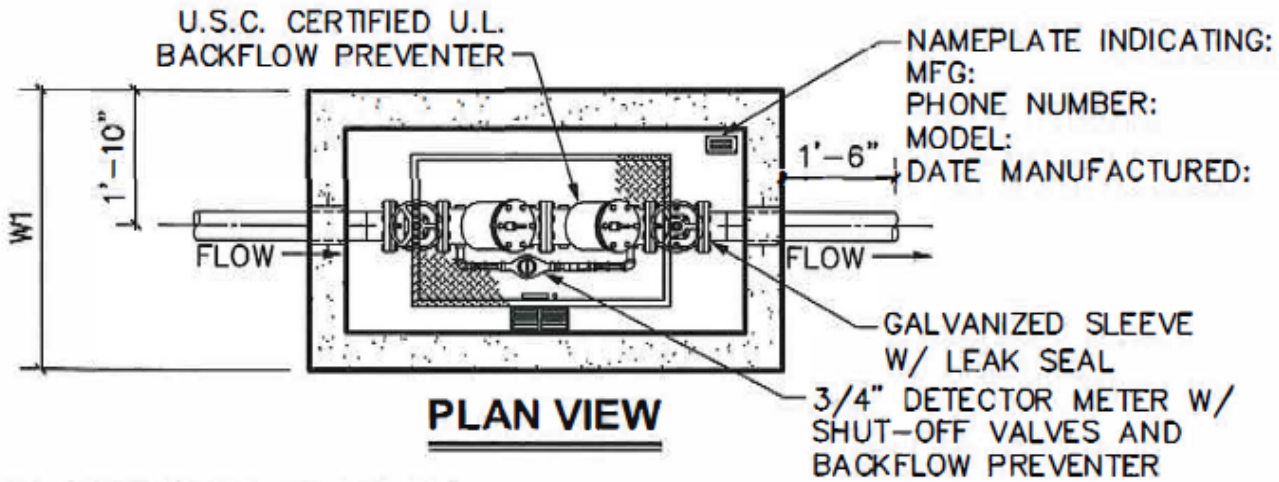

PLAN VIEW

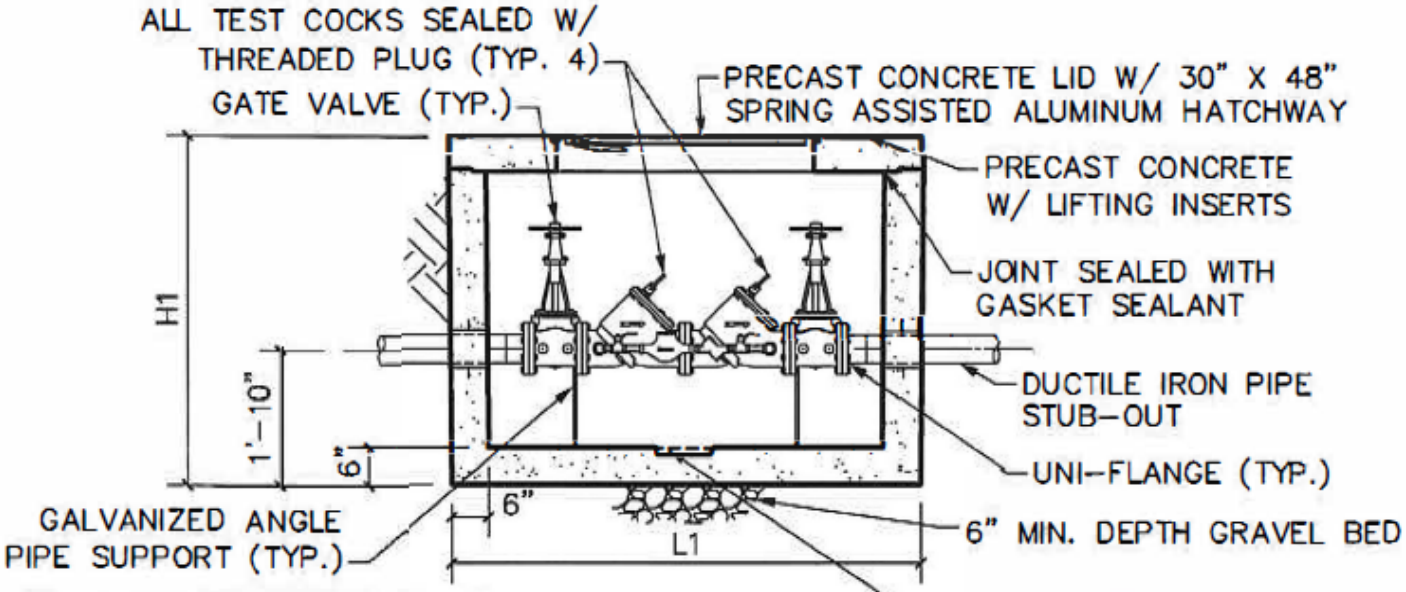

SECTION

SIZE	L1	W1	H1
4"	7'-10"	4'-4"	6'-0"
6"	7'-10"	4'-4"	6'-0"
8"	8'-8"	5'-0"	6'-0"
10"	9'-2"	5'-8"	6'-6"

NOTES:

1. UNIT IS OF MONOLITHIC CONSTRUCTION AT FLOOR AND FIRST STAGE OF WALL WITH SECTIONAL RISER TO REQUIRED DEPTH.
2. REINFORCEMENT: GRADE 60 REINFORCED. STEEL BAR CONFORMING TO ASTM A615 ON REQUIRED CENTERS OR EQUAL.
3. HATCHWAY: 1/4" ALUMINUM DIAMOND PLATE COVER WITH EXTRUDED ALUMINUM FRAME. HATCH TO BE FURNISHED WITH 316 STAINLESS STEEL SNAP LOCK & BRASS FINISH HINGES.
4. PRECAST VAULT SHALL BE FROM APPROVED MATERIALS LIST.
5. PIPE AND FITTINGS SHALL BE DUCTILE IRON.

REVISION DATE 03.2020	STANDARD CONSTRUCTION DETAIL **DOUBLE DETECTOR CHECK FIRE VAULT**	cleburne this is texas

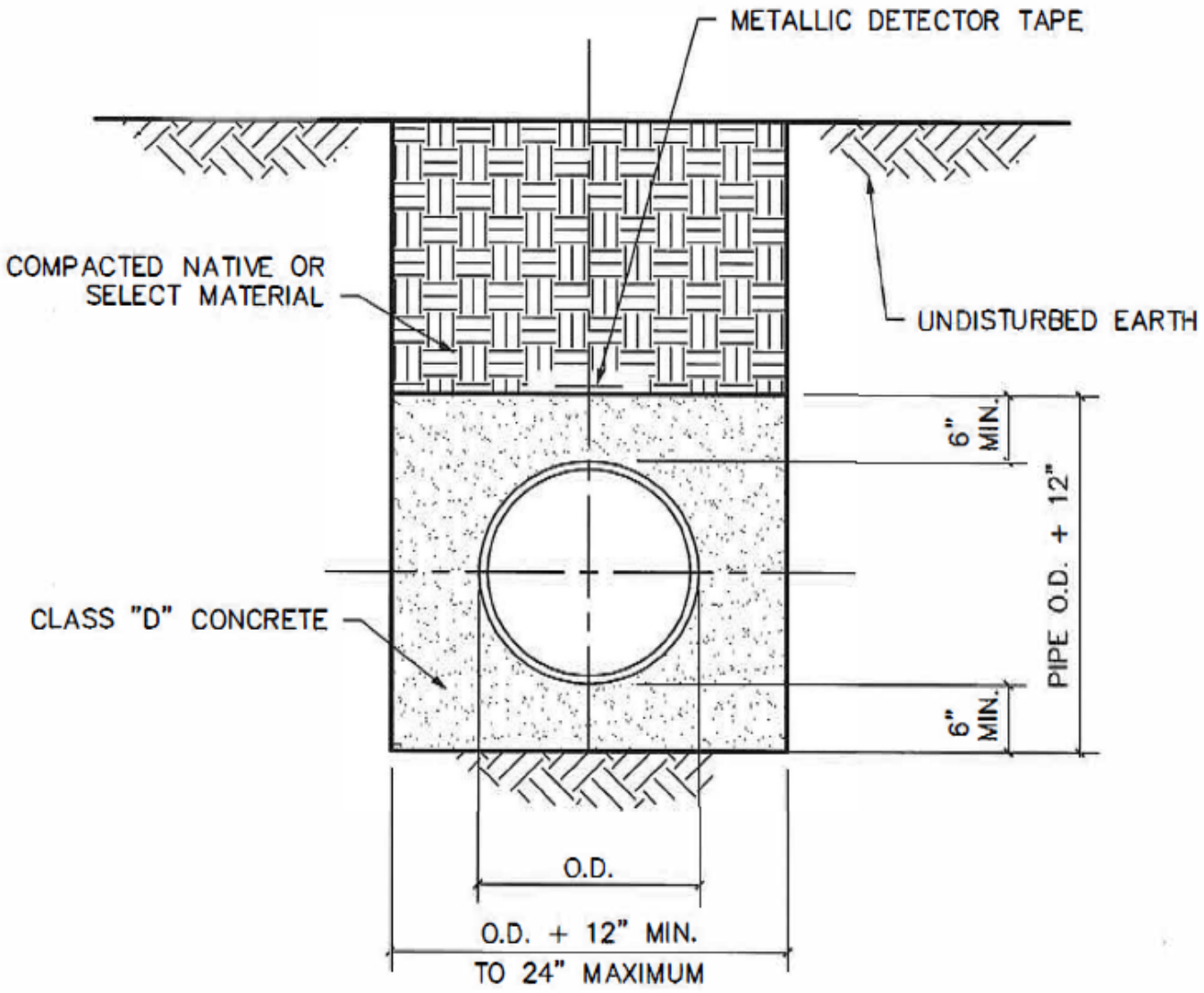

NOTE:
CONCRETE ENCASEMENT MAY BE MODIFIED FOR A CONCRETE CAP.

REVISION DATE 03.2020	STANDARD CONSTRUCTION DETAIL **CONCRETE ENCASEMENT**	cleburne this is texas

H'	4	5	6	7	8	9	10	11	12	13	14	15	16	17	18	19	20	H'
Y'	10	12	14	17	19	22	24	27	29	31	34	36	39	41	43	46	48	Y'

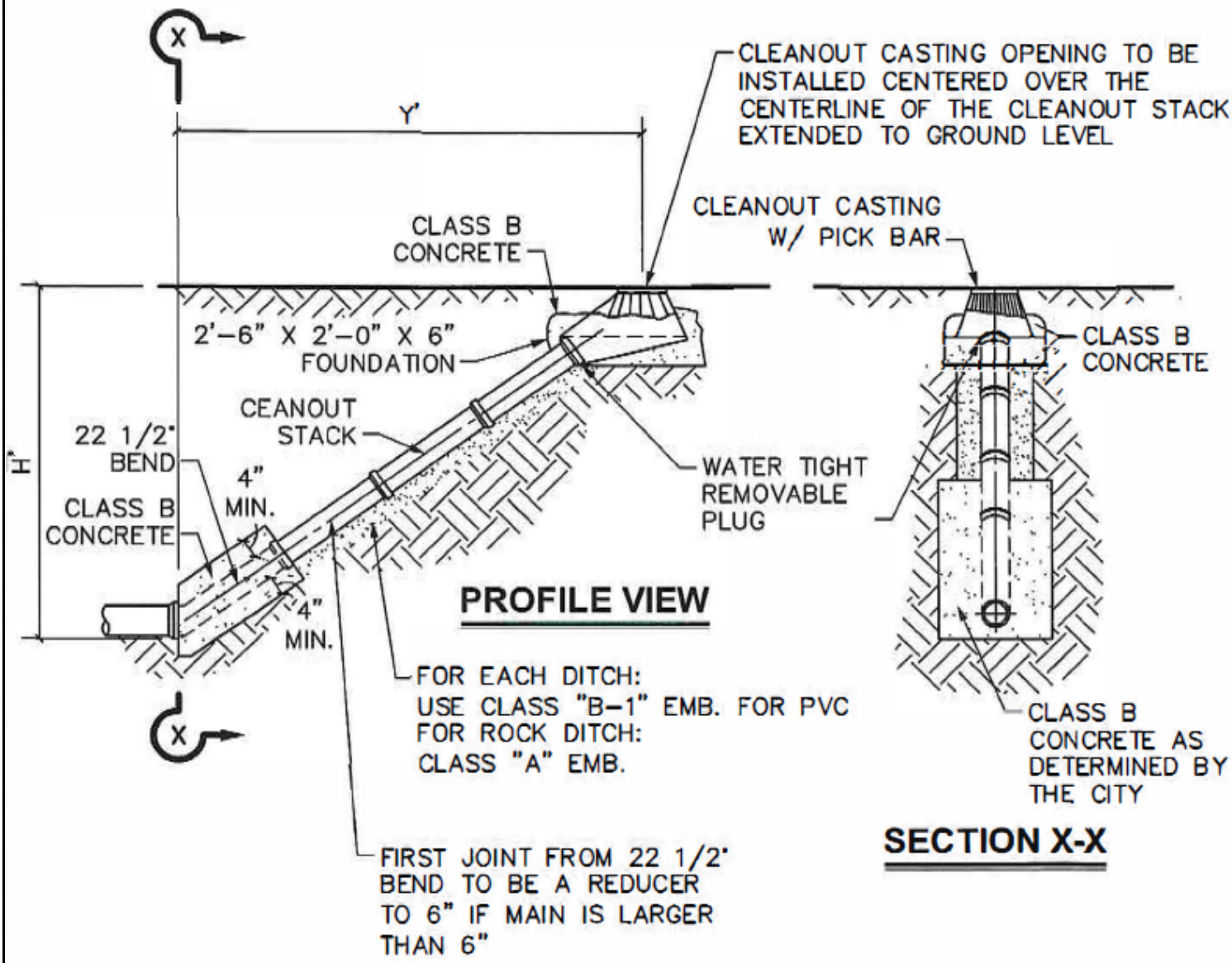

NOTES:

1. IF CLEANOUT IS PLACED IN ADVANCE OF PAVEMENT PLACE SAND AROUND CLEANOUT CASTING IN LIEU OF CLASS B CONCRETE.

2. IF CLEANOUT IS OUTSIDE OF PAVEMENT, CENTER CASTING IN 24" X 24" CLASS A CONCRETE PAD 6" THICK WITH FOUR #3 BARS.

REVISION DATE 03.2020	STANDARD CONSTRUCTION DETAIL **WASTEWATER MAIN CLEANOUT**	cleburne this is texas

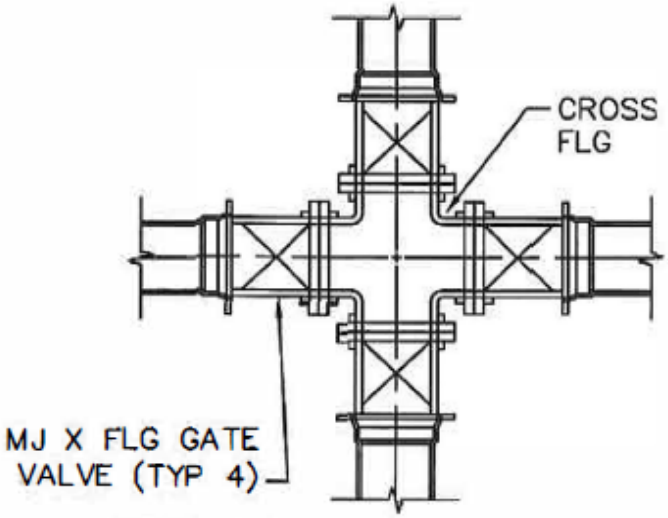

NOTE: ALL CROSSES SHALL HAVE
4 FLANGED GATE VALVES

CROSS FITTINGS

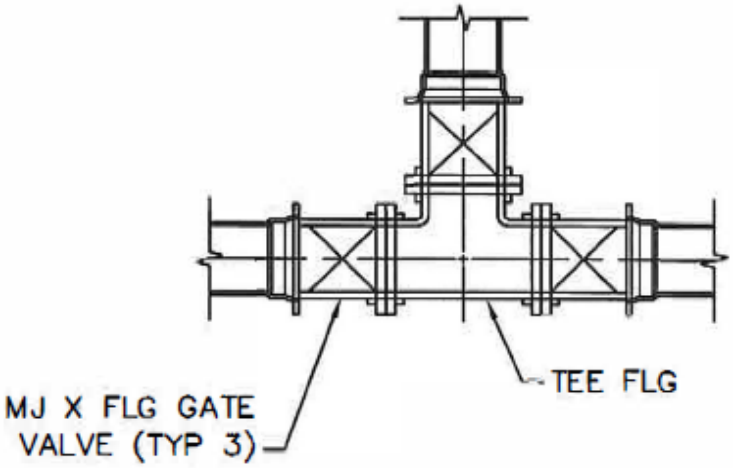

NOTE: ALL TEES SHALL HAVE
3 FLANGED GATE VALVES

TEE FITTINGS

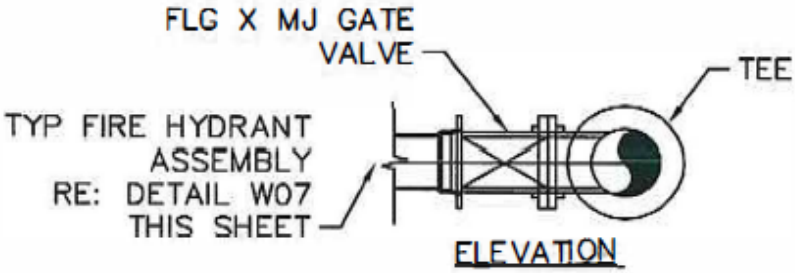

ELEVATION

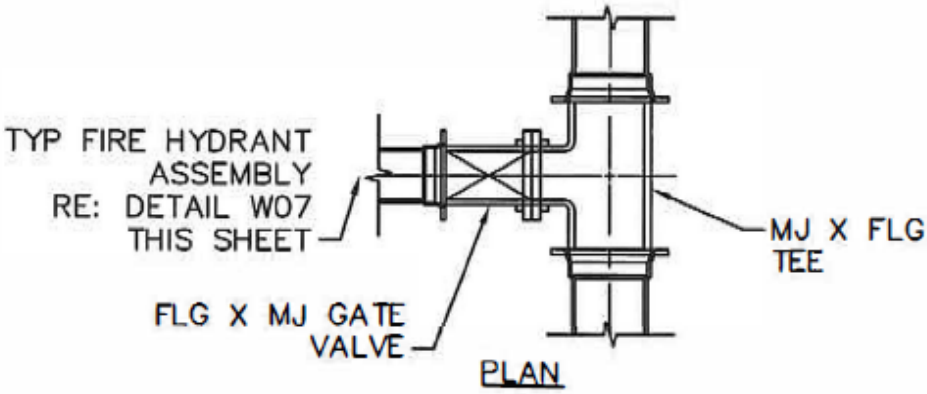

PLAN

FIRE HYDRANT FITTINGS

NOTES:

1. ALL CROSSES, TEES, VALVES AND FIRE HYDRANTS SHALL HAVE FLANGED CONNECTIONS THAT ARE POLY WRAPPED..
2. REFER TO BLOCKING DETAILS FOR BLOCK DESIGN AND INSTALLATION.
3. MEGA-LUG ON ALL MJ FITTINGS.

REVISION DATE 03.2020	STANDARD CONSTRUCTION DETAIL **FITTINGS (WATER)**	cleburne this is texas

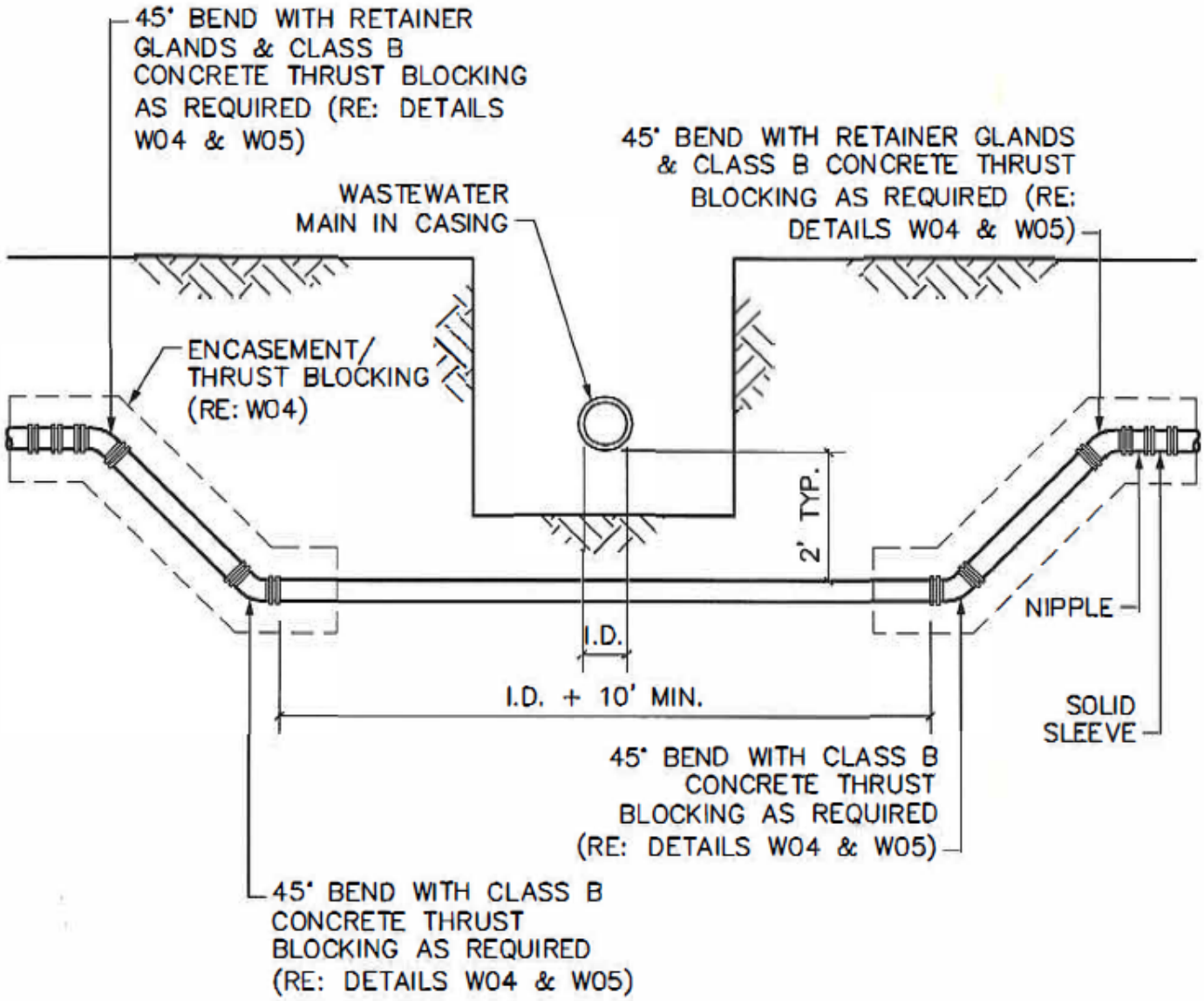

NOTES:

1. INSTALLING PIPE WITH CLEARANCES OF LESS THAN 2' BETWEEN WATER AND SEWER SHALL BE APPROVED BY THE CITY.
2. INSTALLATION AND DESIGN SHALL BE PER TCEQ CHAPTER 217.
3. 3M MARKER PADS SHALL BE LOCATED AT ALL FITTINGS.

REVISION DATE 03.2020	STANDARD CONSTRUCTION DETAIL **WATER MAIN LOWERING BELOW WASTEWATER MAIN**	cleburne this is texas

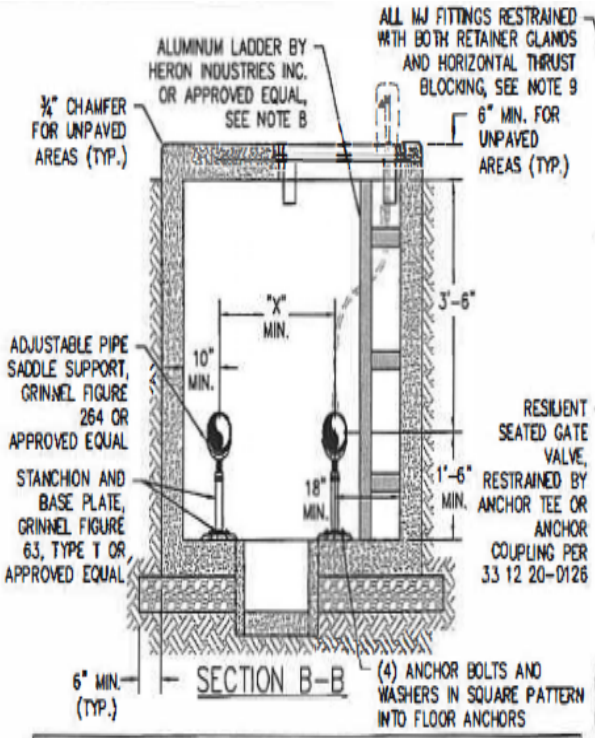

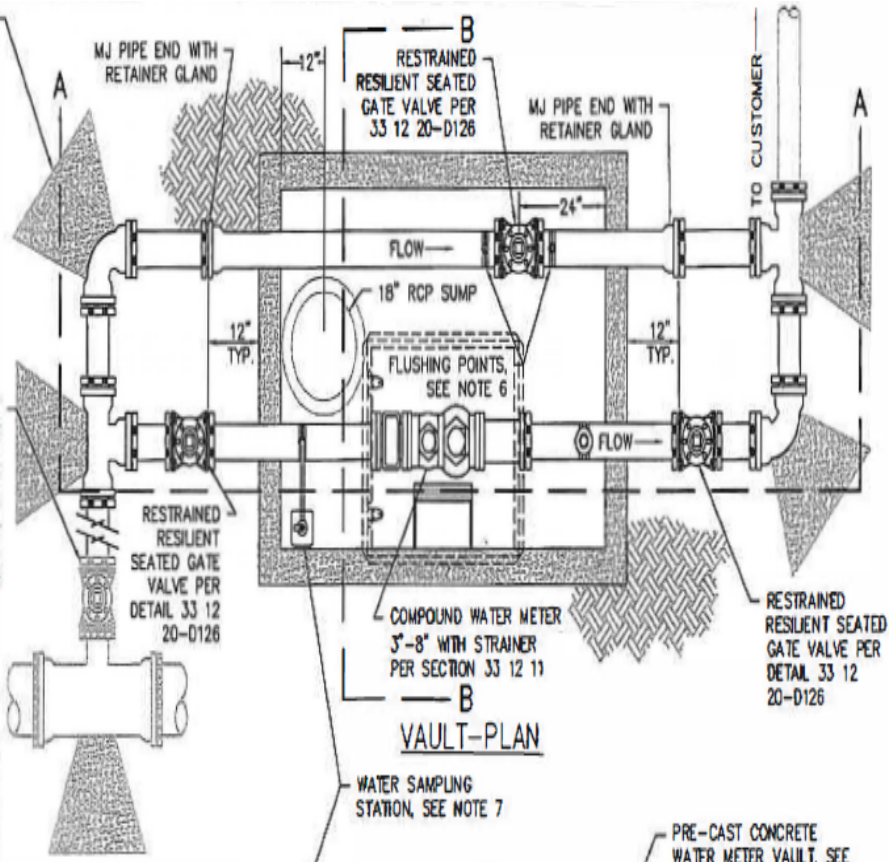

WATER METER VAULT TABLE					
METER SIZE	BYPASS SIZE	MAIN ISOLATION VALVE SIZE	"X" MIN. SEPARATION	"Y" DIM. TO CENTER OF METER	MIN. VAULT INTERIOR DIMENSIONS
3"	4"	6"	18"	2'-8"	64"Lx46"Wx60"H
4"	4"	6"	18"	2'-8"	64"Lx46"Wx60"H
6"	6"	6"	24"	3'-9"	90"Lx60"Wx60"H
8"	8"	8"	30"	3'-9"	90"Lx60"Wx60"H

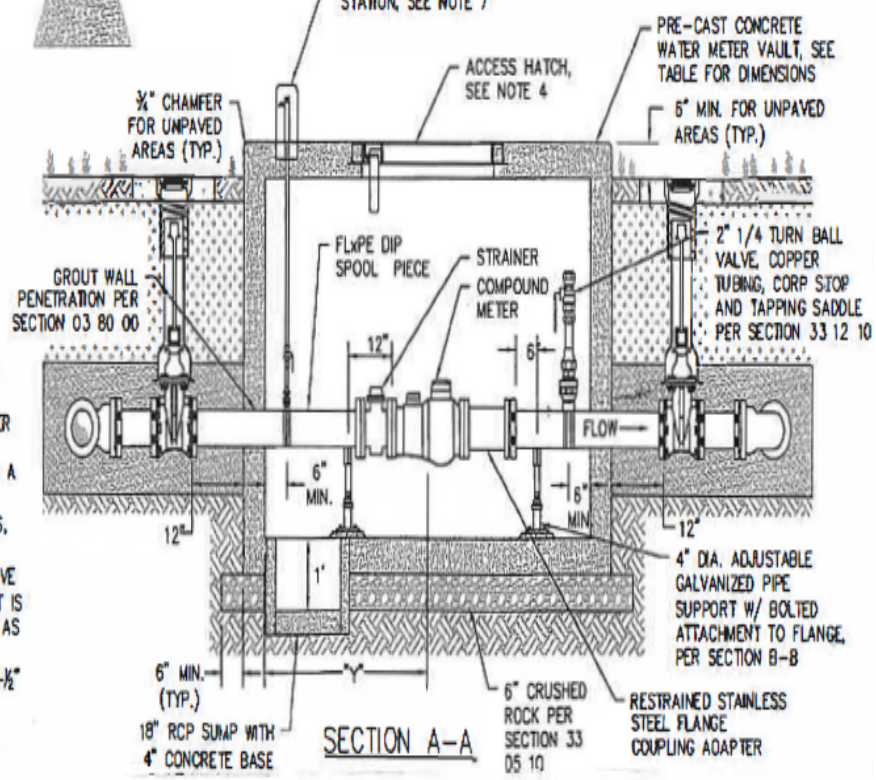

NOTES:

1. WATER METERS LARGER THAN 8" SHALL BE DESIGNED BY ENGINEER.
2. ALL METER VAULT PIPING SHALL BE DUCTILE IRON.
3. 3" METERS SHALL HAVE 4" VAULT PIPING AND SHALL REQUIRE REDUCING FLANGE ADAPTERS ON BOTH SIDES OF METER.
4. ACCESS OPENING SHALL BE CENTERED OVER WATER METER AND SHALL BE:
   - 4.1. NON-TRAFFIC AREAS: NON H-20 LOADING 30"X36" STEEL SINGLE LEAF DOOR, BILCO TYPE J MODEL OR APPROVED EQUAL (AS SHOWN), INTEGRALLY CAST INTO VAULT TOP.
   - 4.2. TRAFFIC AREAS: 32" HINGED DUCTILE IRON FRAME AND COVER OR APPROVED PER MANHOLE LID ASSEMBLY DETAIL AS INDICATED IN THE DRAWINGS.
5. ONLY PRE-CAST VAULTS WILL BE ACCEPTED. CAST-IN-PLACE VAULTS WILL REQUIRE A SEPARATE SUBMITTAL.
6. FOR FLUSHING OF BYPASS LINE, INSTALL 2-1" TAPPING SADDLES, 2-1" CORP STOPS, COPPER TUBING AND 2-1" 1/4 TURN BALL VALVES, PER SECTION 33 12 10.
7. FOR WATER SAMPLING STATION, INSTALL 1" TAPPING SADDLE, CORP STOP, BALL VALVE AND ASSEMBLY FOR WATER SAMPLING STATION PER SECTION 33 12 50. WHEN VAULT IS LOCATED IN TRAFFIC AREAS, LOCATE SAMPLE STATION IN A NON-TRAFFIC AREA OR AS INDICATED ON THE DRAWINGS.
8. ALUMINUM LADDER BY HERON INDUSTRIES OR APPROVED EQUAL: RAILS SHALL BE 1-½" IPS SCH. 40 ALUMINUM PIPE (6063 ALLOY) WITH END CAPS. RUNGS SHALL BE 5/16" THICK ALUMINUM TREAD PLATE (3003 ALLOY) BENT TO FORM 2-¾"x1-¾" CHANNEL. WALL BRACKETS SHALL BE 5/16" THICK 2-½"x10" BENT PLATE (6063 ALLOY) WITH 6" STANDOFF.
9. RESTRAIN ALL MECHANICAL JOINTS FITTINGS WITH HORIZONTAL THRUST BLOCKING PER 33 11 00-D130 AND RETAINER GLANDS. RESTRAIN ALL GATE VALVES WITH RETAINER GLANDS OR ANCHOR TEE OR ANCHOR COUPLING.

REVISION DATE
03.2020

STANDARD CONSTRUCTION DETAIL
WATER METER VAULT

cleburne
this is texas

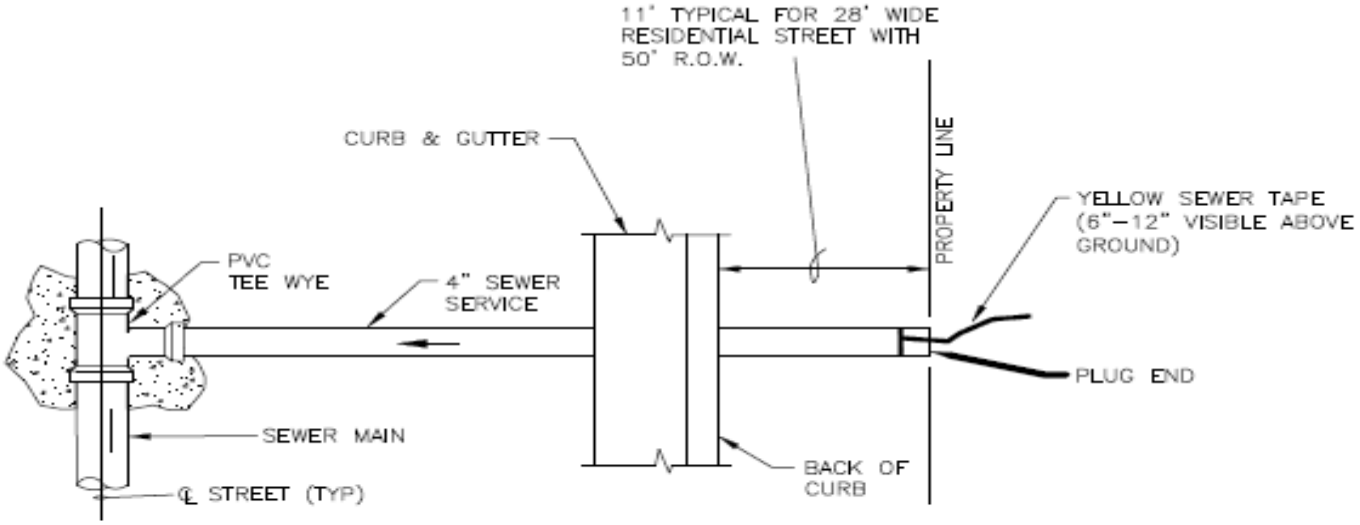

PLAN

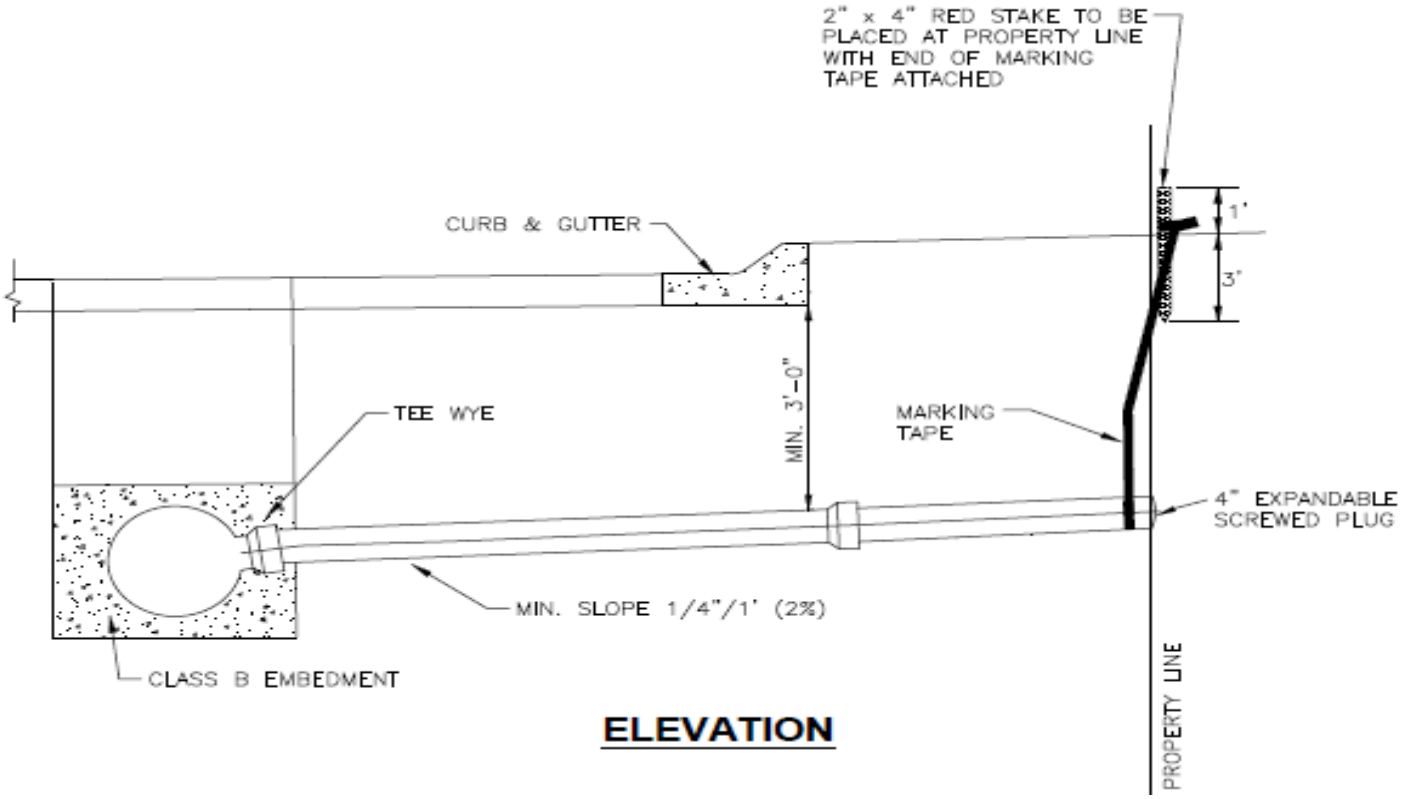

ELEVATION

NOTES:

1. SERVICES WITH LESS THAN 2' CLEARANCE UNDER AN EXISTING OR PROPOSED STORM DRAIN REQUIRE CONCRETE NCASEMENT OR STEEL CASING.
2. SERVICES SHALL BE SDR-26 PVC PIPE WITH CLASS B EMBEDMENT.
3. NEW SERVICE TAPS ON EXISTING MAINS REQUIRE INSERTA-TEE CONNECTION OR APPROVED EQUAL.
4. SERVICES 8" AND LARGER REQUIRE A MANHOLE TO CONNECT TO MAIN. UNLESS OTHERWISE APPROVED BY WATER UTILITIES.

REVISION DATE 03.2020	**SANITARY SEWER SERVICE**	cleburne this is texas

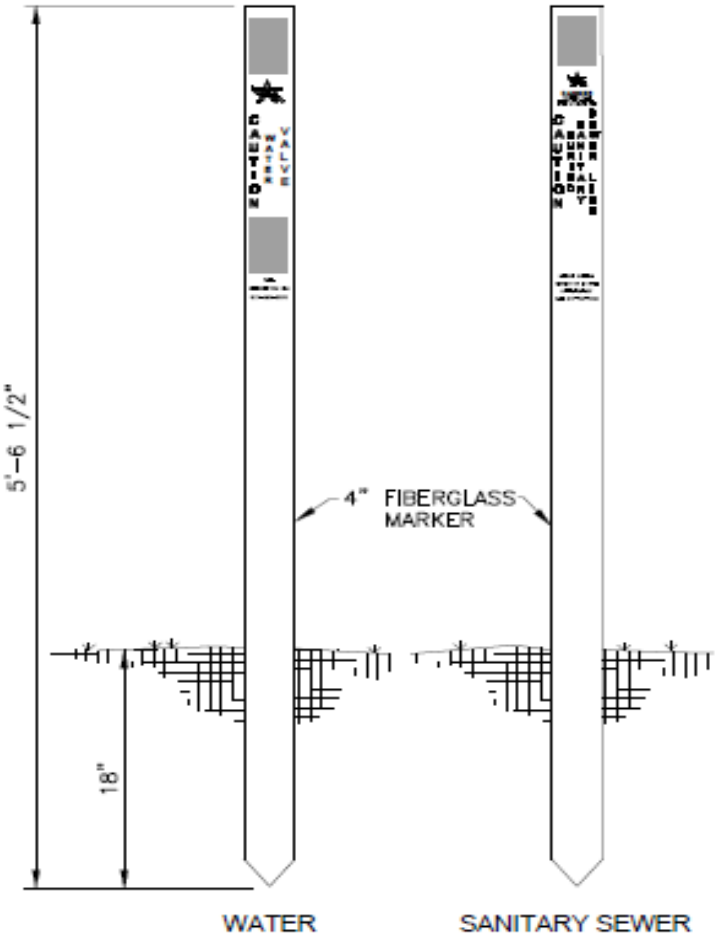

VERTICAL FIBERGLASS MARKER

VALVE MARKER
(SEE NOTE 1)

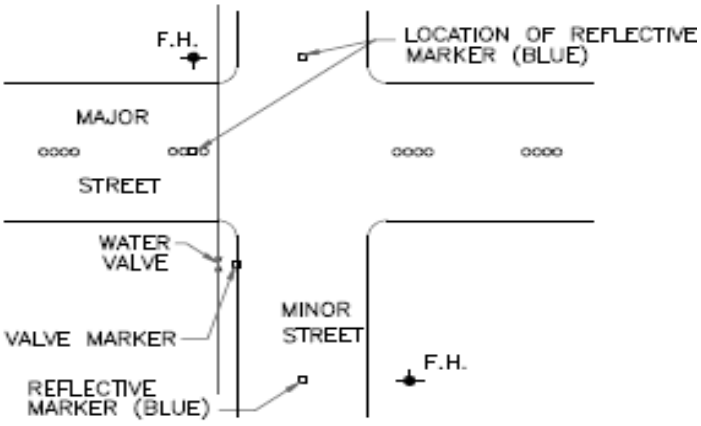

VALVE AND FIRE HYDRANT MARKER LOCATIONS
(SEE NOTES THIS DETAIL)

NOTES:

1. EACH WATER SYSTEM VALVE LOCATED ADJACENT TO OR IN A CITY STREET SHALL RECEIVE A VALVE MARKER (FURNISHED BY THE CITY) PLACED ON THE FACE OF CURB AS CLOSE AS POSSIBLE TO THE VALVE USING MANUFACTURER RECOMMENDED ADHESIVE.
2. EACH LOCATION OF A FIRE HYDRANT SHALL RECEIVE A BLUE REFLECTORIZED MARKER LOCATED IN THE CENTER OF ANY STREET TO WHICH IT IS ADJACENT (2 FOR HYDRANTS ON STREET CORNERS).
3. ALL BLUE FIRE HYDRANT MARKERS SHALL BE A CUBE CORNER TYPE REFLEX REFLECTOR MOLDED OF OPTIC GRADE PLASTIC, WITH A HOUSING OF HIGH IMPACT ABS PLASTIC, WITH A FILLER OF INERT THERMOSETTING RESINS. APEX UNIVERSAL, INC. TYPE: BB TWO WAY BLUE.
4. VERTICAL FIBERGLASS MARKERS REQUIRED ONLY IN UNDEVELOPED AREAS OR AT DIRECTION BY ARLINGTON WATER UTILITIES. SEE GATE VALVE AND MANHOLE DETAILS.

REVISION DATE 03.2020	**WATER LINE MARKERS**	cleburne this is texas

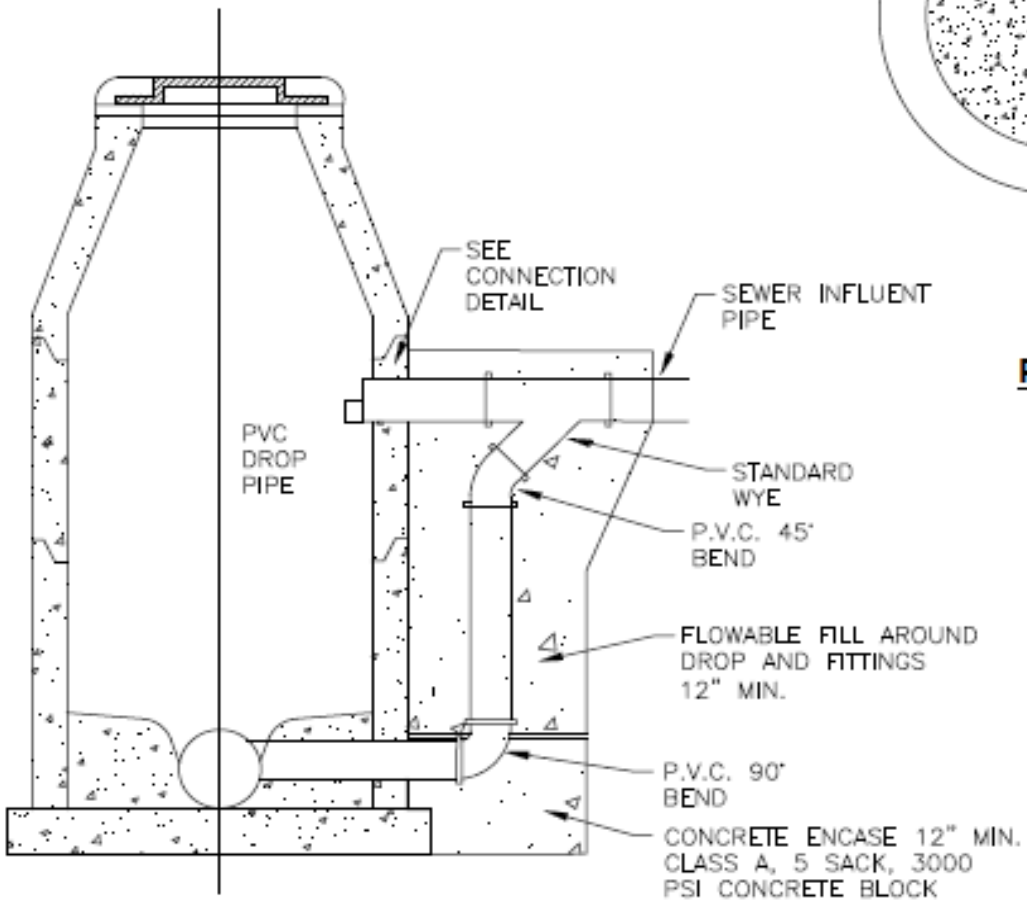

ELEVATION

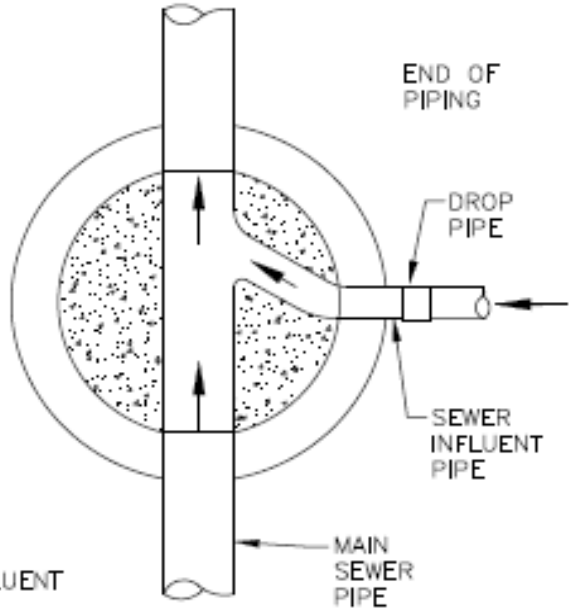

PLAN

CONNECTION DETAIL

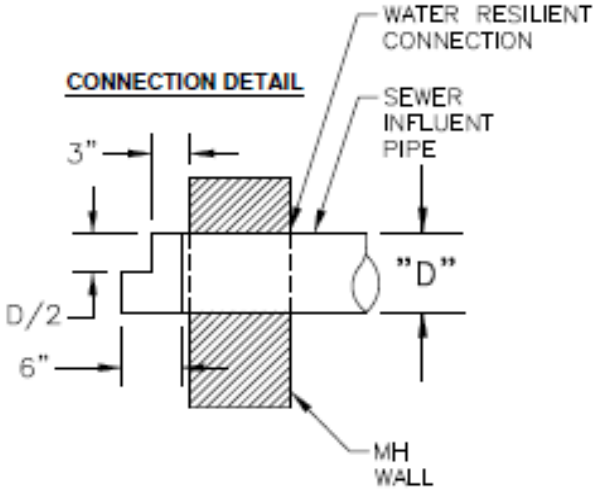

NOTES:

1. DROP PIPE SHALL BE SAME SIZE AS SEWER INFLUENT, 12" MAXIMUM.
2. ALL PRECAST AND CAST-IN-PLACE CONCRETE MANHOLE DETAIL ITEMS APPLY TO DROP MANHOLE CONSTRUCTION.
3. NO DROP PIPING SHALL BE REQUIRED IF SEWER INFLUENT PIPE FLOWLINE IS 24" OR LESS ABOVE MAIN SEWER PIPE FLOWLINES OR IF MAIN SEWER PIPE BENCH IS HIGHER THAN SEWER INFLUENT FLOWLINE.

REVISION DATE 03.2020	OUTSIDE DROP MANHOLE	cleburne this is texas

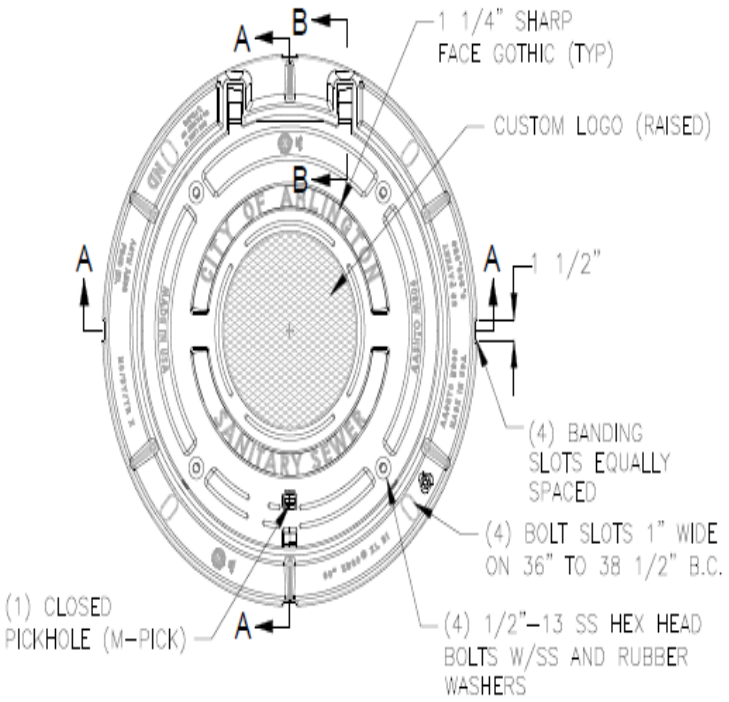

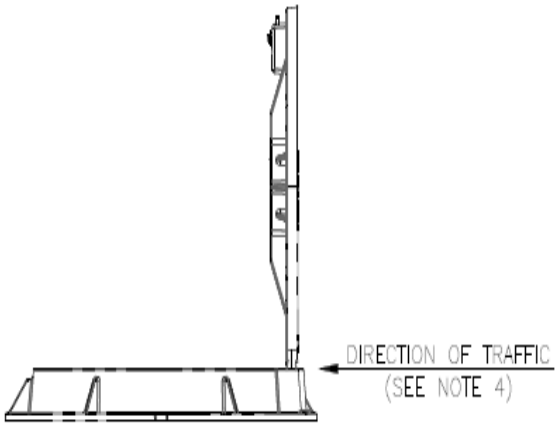

COVER IN 90° LOCKED POSITION

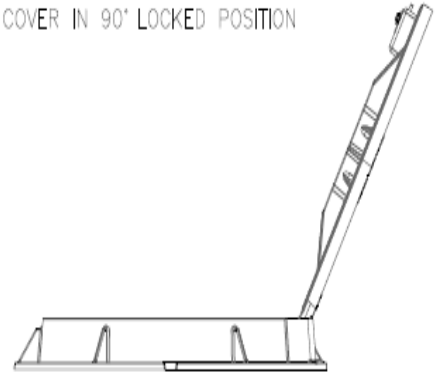

COVER IN 120° RESTING POSITION

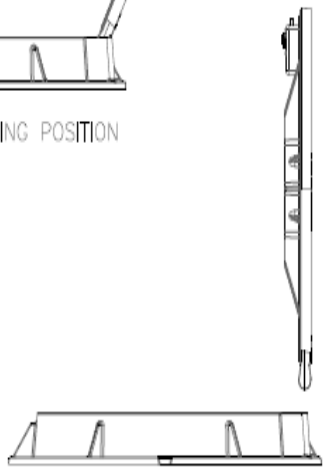

REMOVE COVER @ 90°

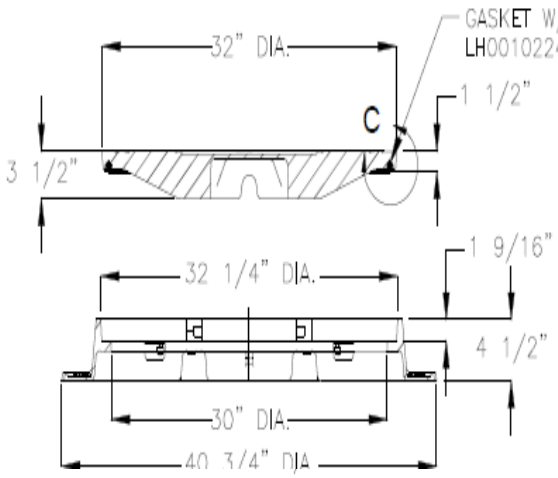

SECTION A-A

DETAIL C
SCALE 2 : 15

NEOPRENE GASKET W/BEAD INSTALLED DURING ASSEMBLY

NOTE:

1. FRAME AND COVER SETS AND PARTS SHALL BE AS LISTED IN THE APPROVED PRODUCTS LISTING. (E.J.I.W. ERGO SHOWN)
2. THESE MANHOLE COVERS AND FRAMES ARE NOT TO BE USED ON PRIVATE MANHOLES.
3. WATERTIGHT MANHOLE FRAME AND COVER USED WITHIN CITY OF ARLINGTON ENTERTAINMENT DISTRICT SHALL BE PRODUCT NO. 42432101.
4. HINGE MUST BE INSTALLED FACING ONCOMING TRAFFIC.

REVISION DATE 03.2020	**WATERTIGHT MANHOLE FRAME & COVER**	cleburne this is texas

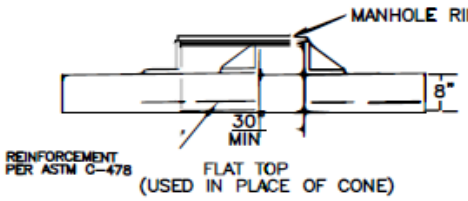

24" C.I. FRAME AND COVER BASS AND HAYES PATTERN VRM-300 OR EQUAL MARKED SANITARY SEWER

Manholes constructed within 100 year flood plain shall have watertight ring and lid.

34" O.D. x 30" I.D. Precast Concrete Grade Rings (Plaster exterior and interior surfaces with coats of non-shrink, hydraulic cement grout.)

Manhole Frame and Cover

Mortar

Variable, but not to exceed 2'-6" (See Note 1.)

End of Transition

Use double ring of GS5 Precast Concrete Sealant, as manufactured by General Sealants, Inc., or CS-102 Con Seal, as manufactured by Concrete Sealants, Inc., to seal ring to concrete and between grade rings. (See Note 1.)

30"

Coat exterior of manhole with 2 mop coats of Themec 450 Heavy Themecol or Kopper's Bitumastic Super Service, Black.

Varies

Concentric Manhole Cone

60" Diameter

Per ASTM C478, Class III Wall B

Invert

Bench

ASTM C 478, Class III O-ring rubber gasket joint See detail

Non shrink hydraulic cement grout (typ.)

6" Min. Typ.

Rubber boot at all pipe penetrations Kor n seal or approved equal

1" PER FOOT (TYP)

8" Min.

Rubber boot

Concrete Base

Manhole Elevation

6'-10" Minimum

Use 6" min. layer of washed rock beneath manhole where ground water is encountered. Bottom to be poured in dry.

Wipe interior joint with non-shrink hydraulic cement grout

GS5 or GS102

O-ring rubber gasket

Joint Detail

Notes:

1. Grade rings may be used to adjust neck 12" or less. When adjustment is greater than 12", contractor shall use sono tube and place concrete for neck adjustment. Precast concrete grade rings shall be constructed by manufacturer in standard 2", 3", 6", 8" and 12" lengths.
2. All manhole inverts shall be full depth of sewer pipes. All inverts shall extend throughout manhole bottom and provide smooth flow transitions.
3. Manholes in undeveloped areas shall be installed with 5'x5'x5" thick concrete pads with manhole cover in center of pad. Pads shall be reinforced with four No. 4 rebars. Install fiberglass MH marker by pad.
4. All benches shall be slightly higher than top of pipes and slope gently down to inverts.

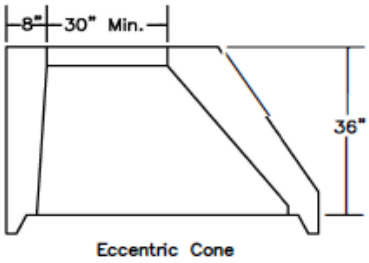

Eccentric Cone

PRECAST CONCRETE MANHOLE

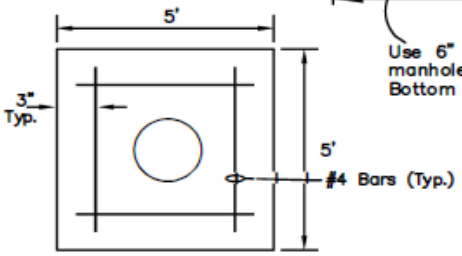

MANHOLE PAD (5" thick) FOR NON-TRAFFIC AREAS

REVISION DATE 03.2020	PRECAST CONCRETE MANHOLE	cleburne this is texas

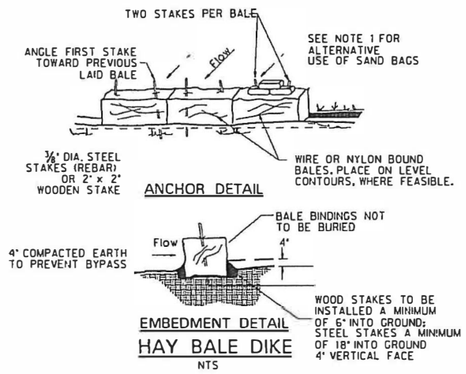

HAY BALE DIKE

NTS

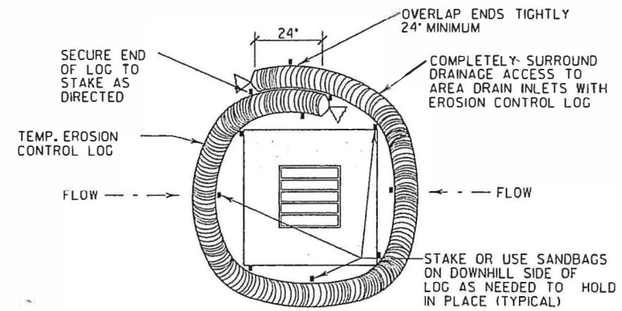

EROSION CONTROL LOG AT DROP INLET

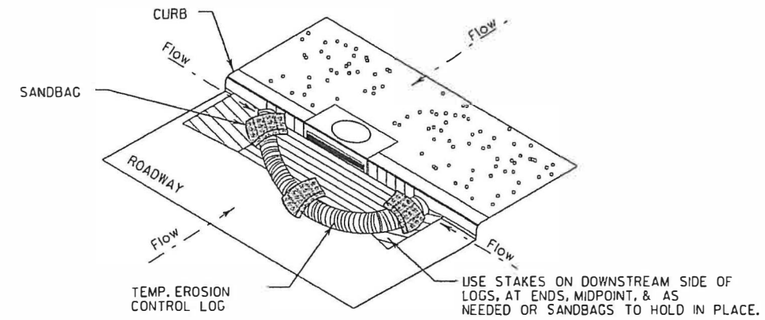

EROSION CONTROL LOG AT CURB INLET

1. EROSION CONTROL LOGS SHALL BE INSTALLED IN ACCORDANCE WITH MANFACTURER'S RECOMMENDATIONS, OR AS DIRECTED BY THE ENGINEER.
2. LENGTHS OF EROSION CONTROL LOGS SHALL BE IN ACCORDANCE WITH MANUFACTURER'S RECOMMENDATIONS AND AS REQUIRED FOR THE PURPOSE INTENDED.
3. UNLESS OTHERWISE DIRECTED, USE BIODEGRADABLE OR PHOTODEGRADABLE CONTAINMENT MESH ONLY WHERE LOG WILL REMAIN IN PLACE AS PART OF A VEGETATIVE SYSTEM. FOR TEMPORARY INSTALLATIONS, USE RECYCLABLE CONTAINMENT MESH.
4. FILL LOGS WITH SUFFICIENT FILTER MATERIAL TO ACHIEVE THE MINIMUM COMPACTED DIAMETER SPECIFIED IN THE PLANS WITHOUT EXCESSIVE DEFORMATION.
5. STAKES SHALL BE 2" X 2" WOOD OR #3 REBAR, 2'-4' LONG, EMBEDDED SUCH THAT 2" PROTRUDES ABOVE LOG, OR AS DIRECTED BY THE ENGINEER.
6. DO NOT PLACE STAKES THROUGH CONTAINMENT MESH.
7. COMPOST CRADLE MATERIAL IS INCIDENTAL & WILL NOT BE PAID FOR SEPARATELY.
8. SANDBAGS USED AS ANCHORS SHALL BE PLACED ON TOP OF LOGS & SHALL BE OF SUFFICIENT SIZE TO HOLD LOGS IN PLACE.
9. TURN THE ENDS OF EACH ROW OF LOGS UPSLOPE TO PREVENT RUNOFF FROM FLOWING AROUND THE LOG.
10. FOR HEAVY RUNOFF EVENTS, ADDITIONAL UPSTREAM STAKES MAY BE NECESSARY TO KEEP LOG FROM FOLDING IN ON ITSELF.

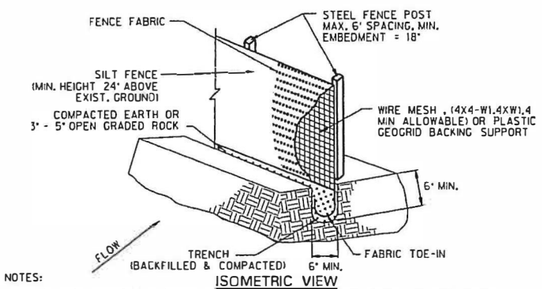

ISOMETRIC VIEW

GENERAL NOTES:

1. STEEL POSTS WHICH SUPPORT THE SILT FENCE SHALL BE INSTALLED WITH A SLIGHT ANGLE TOWARD THE ANTICIPATED RUNOFF SOURCE. POST MUST BE EMBEDDED A MINIMUM OF 18".
2. THE TOE OF THE SILT FENCE SHALL BE TRENCHED IN WITH A SPADE OR MECHANICAL TRENCHER, SO THAT THE DOWNSLOPE FACE OF THE TRENCH IS FLAT AND PERPENDICULAR TO THE LINE OF FLOW. WHERE FENCE CANNOT BE TRENCHED IN WEIGHT FABRIC FLAP WITH WASHED GRAVEL ON UPHILL SIDE, AS NECESSARY, TO PREVENT FLOW UNDER FENCE.
3. THE TRENCH MUST BE A MINIMUM OF 6 INCHES DEEP AND 6 INCHES WIDE TO ALLOW FOR THE SILT FENCE FABRIC TO BE LAID IN THE GROUND AND BACKFILLED.
4. SILT FENCE SHOULD BE SECURELY FASTENED TO EACH STEEL SUPPORT POST OR TO BACKING SUPPORT, WHICH IS IN TURN ATTACHED TO THE STEEL FENCE POST. FABRIC SHALL OVERLAP AT ABUTTING ENDS A MINIMUM OF 3 FEET AND SHALL BE JOINED SUCH THAT NO BYPASS OR LEAKAGE OCCURS.
5. INSPECTION SHALL BE MADE WEEKLY OR AFTER EACH RAINFALL. REPAIR OR REPLACEMENT SHALL BE MADE PROMPTLY AS NEEDED.
6. SILT FENCE SHALL BE REMOVED WHEN THE SITE IS COMPLETELY STABILIZED SO AS NOT TO BLOCK OR IMPEDE STORM FLOW OR DRAINAGE.
7. ACCUMULATED SILT SHALL BE REMOVED WHEN IT REACHES A DEPTH OF 6 INCHES. THE SILT SHALL BE DISPOSED OF IN AN APPROVED SITE AND IN SUCH A MANNER AS TO NOT CONTRIBUTE TO ADDITIONAL SILTATION.

SILT FENCE DETAILS

NTS

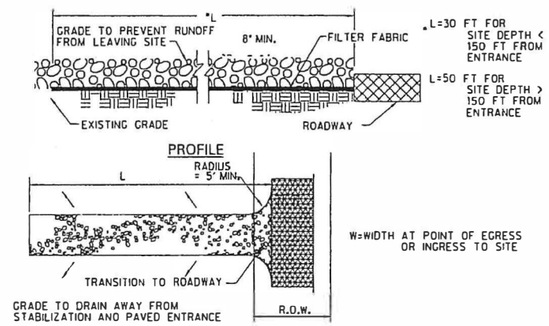

PLAN VIEW

GENERAL NOTES

1. THE ENTRANCE MUST BE PROPERLY GRADED OR INCORPORATE A DRAINAGE SWALE TO PREVENT RUNOFF FROM LEAVING THE CONSTRUCTION SITE.
2. STONE SHALL BE 3 TO 5 INCH DIAMETER CRUSHED ROCK OR ACCEPTABLE CRUSHED PORTLAND CEMENT CONCRETE

STABILIZED CONSTRUCTION ENTRANCE

NTS

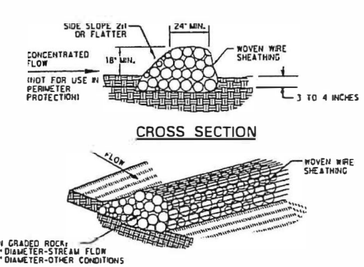

GENERAL NOTES:

1. WOVEN WIRE SHEATHING SHALL HAVE MAXIMUM OPENING OF ONE (1) INCH AND A MINIMUM WIRE SIZE OF 20 GAUGE AND SHALL BE SECURED WITH SNOAT RINGS.
2. THE ROCK BERM SHALL BE INSPECTED WEEKLY OR AFTER EACH RAIN AND SHALL BE REPLACED WHEN THE STRUCTURE CEASES TO FUNCTION PROPERLY.
3. WHEN SILT REACHES A DEPTH EQUAL TO ONE-THIRD OF THE HEIGHT OF THE BERM OR ONE FOOT, WHICHEVER IS LESS, THE SILT SHALL BE REMOVED AND DISPOSED OF IN AN APPROVED MANNER.
4. WHEN THE SITE IS COMPLETELY STABILIZED, THE BERM AND ACCUMULATED SILT SHALL BE REMOVED AND DISPOSED OF IN AN APPROVED MANNER.

ROCK BERM DETAILS

NTS

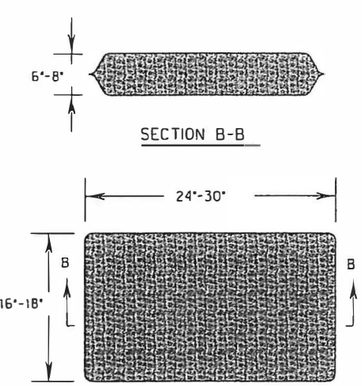

SANDBAG DETAIL

CITY OF CLEBURNE

EROSION CONTROL DETAILS

SCALE = 1:2

PLOT DATE: 7/29/2016 4:50:09 PM

38 46 Erosion ControlDetails.dgn